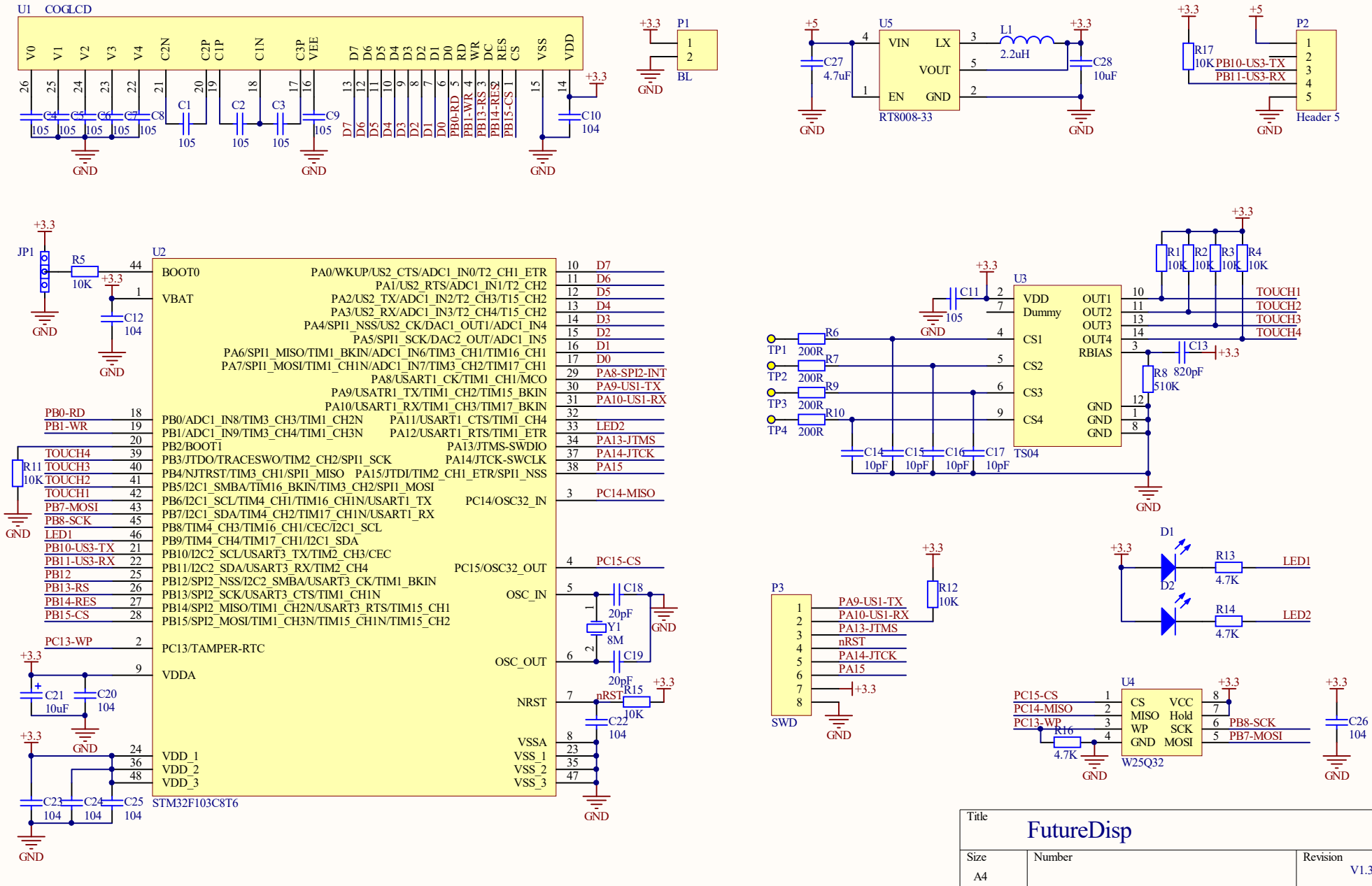
U1 COGLCD
V0 V1 V2 V3 V4 C2N C2P C1P C1N C3P VEE D7 D6 D5 D4 D3 D2 D1 D0 RD WR DC RES CS VSS VDD
C4 C5 C6 C7 C8 C1 C2 C3 C9 C10
105 104
GND
P1
BL
U5
VIN LX VOUT EN GND
RT8008-33
L1 2.2uH
C27 4.7uF
C28 10uF
+5 +3.3
P2
Header 5
R17 10K
PB10-US3-TX
PB11-US3-RX
U2
STM32F103C8T6
BOOT0 VBAT VDD_1 VDD_2 VDD_3 VSS_1 VSS_2 VSS_3 VSSA VDDA NRST OSC_IN OSC_OUT
PA0/WKUP/US2_CTS/ADC1_IN0/T2_CH1_ETR
PA1/US2_RTS/ADC1_IN1/T2_CH2
PA2/US2_TX/ADC1_IN2/T2_CH3/T15_CH2
PA3/US2_RX/ADC1_IN3/T2_CH4/T15_CH2
PA4/SPI1_NSS/US2_CK/DAC1_OUT1/ADC1_IN4
PA5/SPI1_SCK/DAC2_OUT/ADC1_IN5
PA6/SPI1_MISO/TIM1_BKIN/ADC1_IN6/TIM3_CH1/TIM16_CH1
PA7/SPI1_MOSI/TIM1_CH1N/ADC1_IN7/TIM3_CH2/TIM17_CH1
PA8/USART1_CK/TIM1_CH1/MCO
PA9/USATR1_TX/TIM1_CH2/TIM15_BKIN
PA10/USART1_RX/TIM1_CH3/TIM17_BKIN
PA11/USART1_CTS/TIM1_CH4
PA12/USART1_RTS/TIM1_ETR
PA13/JTMS-SWDIO
PA14/JTCK-SWCLK
PA15/JTDI/TIM2_CH1_ETR/SPI1_NSS
PB0/ADC1_IN8/TIM3_CH3/TIM1_CH2N
PB1/ADC1_IN9/TIM3_CH4/TIM1_CH3N
PB2/BOOT1
PB3/JTDO/TRACESWO/TIM2_CH2/SPI1_SCK
PB4/NJTRST/TIM3_CH1/SPI1_MISO
PB5/I2C1_SMBA/TIM16_BKIN/TIM3_CH2/SPI1_MOSI
PB6/I2C1_SCL/TIM4_CH1/TIM16_CH1N/USART1_TX
PB7/I2C1_SDA/TIM4_CH2/TIM17_CH1N/USART1_RX
PB8/TIM4_CH3/TIM16_CH1/CEC/I2C1_SCL
PB9/TIM4_CH4/TIM17_CH1/I2C1_SDA
PB10/I2C2_SCL/USART3_TX/TIM2_CH3/CEC
PB11/I2C2_SDA/USART3_RX/TIM2_CH4
PB12/SPI2_NSS/I2C2_SMBA/USART3_CK/TIM1_BKIN
PB13/SPI2_SCK/USART3_CTS/TIM1_CH1N
PB14/SPI2_MISO/TIM1_CH2N/USART3_RTS/TIM15_CH1
PB15/SPI2_MOSI/TIM1_CH3N/TIM15_CH1N/TIM15_CH2
PC13/TAMPER-RTC
PC14/OSC32_IN
PC15/OSC32_OUT
D7 D6 D5 D4 D3 D2 D1 D0 PA8-SPI2-INT PA9-US1-TX PA10-US1-RX LED2 PA13-JTMS PA14-JTCK PA15 PC14-MISO PC15-CS
JP1 R5 10K C12 104
R11 10K
PB0-RD PB1-WR TOUCH4 TOUCH3 TOUCH2 TOUCH1 PB7-MOSI PB8-SCK LED1 PB10-US3-TX PB11-US3-RX PB12 PB13-RS PB14-RES PB15-CS
C18 20pF Y1 8M C19 20pF
C21 10uF C20 104
C22 104 R15 10K nRST
C23 C24 C25 104
U3
VDD Dummy CS1 CS2 CS3 CS4 OUT1 OUT2 OUT3 OUT4 RBIAS GND GND GND
TS04
R1 R2 R3 R4 10K
TOUCH1 TOUCH2 TOUCH3 TOUCH4
C11 105
C13 820pF
R8 510K
R6 R7 R9 R10 200R
TP1 TP2 TP3 TP4
C14 C15 C16 C17 10pF
P3
SWD
R12 10K
PA9-US1-TX PA10-US1-RX PA13-JTMS nRST PA14-JTCK PA15
D1 D2
R13 4.7K LED1
R14 4.7K LED2
U4
W25Q32
CS MISO WP GND VCC Hold SCK MOSI
PC15-CS PC14-MISO PC13-WP
R16 4.7K
PB8-SCK PB7-MOSI
C26 104
Title
FutureDisp
Size A4
Number
Revision V1.3
Date: 2016/1/12
Sheet of
File: E:\Q-ShareWe\..\FutureDisp_V1.3.SchDoc
Drawn By: k10