SONY

ILX554B

2048-pixel CCD Linear Sensor (B/W) for Single 5V Power Supply Bar-code Reader

Description

The ILX554B is a rectangular reduction type CCD linear image sensor designed for bar code POS hand scanner and optical measuring equipment use. A built-in timing generator and clock-drivers ensure single 5V power supply for easy use.

Features

- Number of effective pixels: 2048 pixels
- Pixel size: 14µm × 56µm (14µm pitch)
- Single 5V power supply
- Ultra-high sensitivity
- Built-in timing generator and clock-drivers
- Built-in sample-and-hold circuit
- Maximum clock frequency: 2MHz

Absolute Maximum Ratings

• Supply voltage	V_{DD}	6	V
• Operating temperature		–10 to +60	°C
• Storage temperature		–30 to +80	°C

Pin Configuration (Top View)

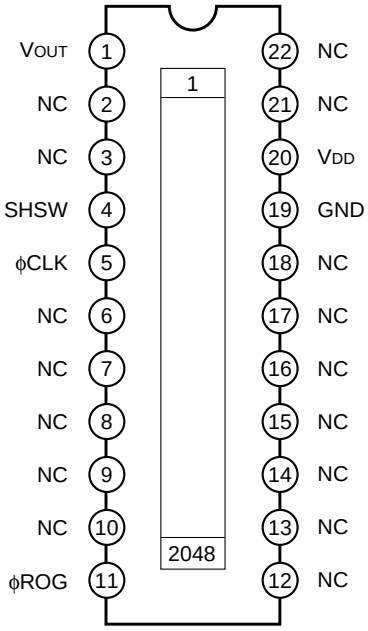

22 pin DIP (Cer-DIP)

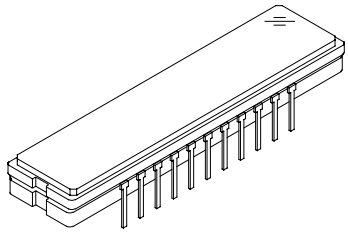

Block Diagram

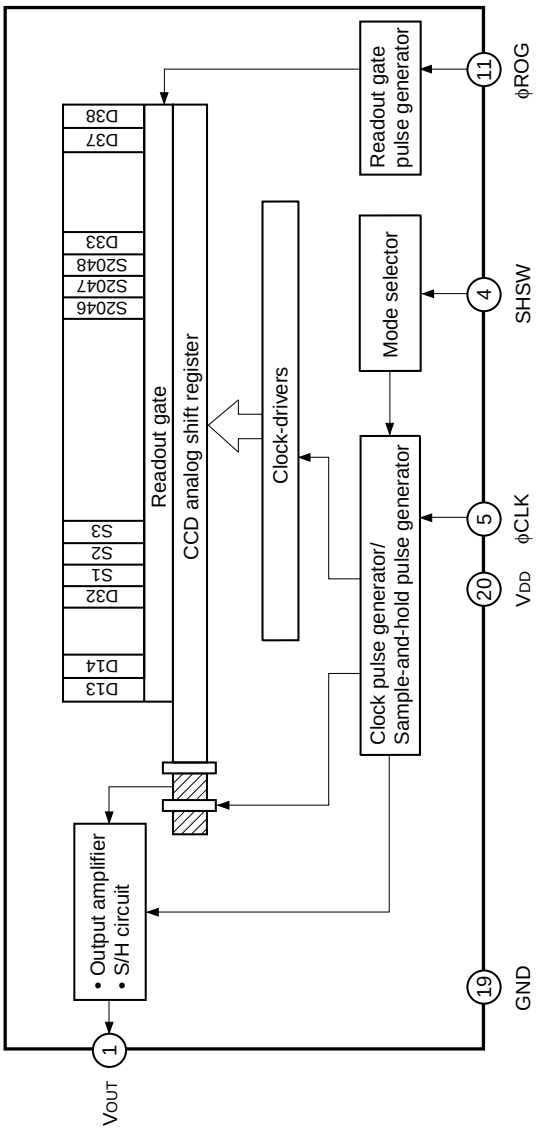

Sony reserves the right to change products and specifications without prior notice. This information does not convey any license by any implication or otherwise under any patents or other right. Application circuits shown, if any, are typical examples illustrating the operation of the devices. Sony cannot assume responsibility for any problems arising out of the use of these circuits.

E01752A22-PS

Pin Description

Pin No.	Symbol	Description	Pin No.	Symbol	Description
1	V_{OUT}	Signal output	12	NC	NC
2	NC	NC	13	NC	NC
3	NC	NC	14	NC	NC
4	SHSW	Switch (with S/H or without S/H)	15	NC	NC
5	ϕCLK	Clock pulse input	16	NC	NC
6	NC	NC	17	NC	NC
7	NC	NC	18	NC	NC
8	NC	NC	19	GND	GND
9	NC	NC	20	V_{DD}	5V power supply
10	NC	NC	21	NC	NC
11	ϕROG	Readout gate pulse input	22	NC	NC

Mode Description

Mode in use	Pin 4 (SHSW)
With S/H	GND
Without S/H	V_{DD}

Recommended Supply voltage

Item	Min.	Typ.	Max.	Unit
V_{DD}	4.5	5.0	5.5	V

Input Clock voltage Condition*1

Item	Min.	Typ.	Max.	Unit
V_{IH}	4.5	5.0	V_{DD}	V
V_{IL}	0	—	0.5	V

*1 This is applied to the all pulses applied externally. (ϕCLK, ϕROG)

Clock Characteristics

Item	Symbol	Min.	Typ.	Max.	Unit
Input capacity of ϕCLK	$C_{\phi CLK}$	—	10	—	pF
Input capacity of ϕROG	$C_{\phi ROG}$	—	10	—	pF

Electro-optical Characteristics

(Ta = 25°C, V_{DD} = 5V, Clock frequency: 1MHz, Light source = 3200K,
IR cut filter: CM-500S (t = 1.0mm), Without S/H mode)

Item	Symbol	Min.	Typ.	Max.	Unit	Remarks
Sensitivity 1	R1	180	240	300	V/(lx · s)	Note 1
Sensitivity 2	R2	—	3500	—	V/(lx · s)	Note 2
Sensitivity nonuniformity	PRNU	—	5.0	10.0	%	Note 3
Saturation output voltage	V_{SAT}	0.8	1.0	—	V	—
Dark voltage average	V_{DRK}	—	3.0	6.0	mV	Note 4
Dark signal nonuniformity	DSNU	—	6.0	12.0	mV	Note 4
Image lag	IL	—	1	—	%	Note 5
Dynamic range	DR	—	333	—	—	Note 6
Saturation exposure	SE	—	0.004	—	lx · s	Note 7
5V current consumption	I_{VDD}	—	5.0	10	mA	—
Total transfer efficiency	TTE	92	98.0	—	%	—
Output impedance	Z_O	—	250	—	Ω	—
Offset level	V_{OS}	—	2.85	—	V	Note 8

Note)

1. For the sensitivity test light is applied with a uniform intensity of illumination.
2. Light sourse: LED λ = 660nm
3. PRNU is defined as indicated below. Ray incidence conditions are the same as for Note 1.

$$PRNU = \frac{(V_{MAX} - V_{MIN})/2}{V_{AVE}} \times 100\ [\%]$$

The maximum output of all the valid pixels is set to V_{MAX}, the minimum output to V_{MIN} and the average output to V_{AVE}.

4. Integration time is 10ms.
5. Typical value is used for clock pulse and readout pulse. V_{OUT} = 500mV.

6. $$DR = \frac{V_{SAT}}{V_{DRK}}$$

When optical integration time is shorter, the dynamic range sets wider because dark voltage is in proportion to optical integration time.

7. $$SE = \frac{V_{SAT}}{R1}$$

8. V_{OS} is defined as indicated below.

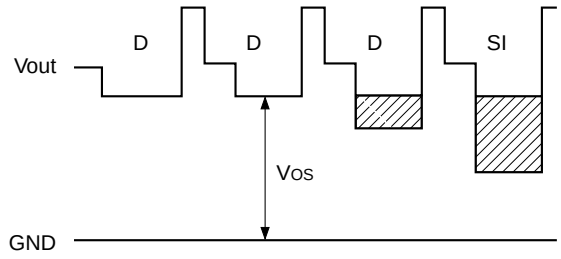

Clock Timing Diagram (without S/H mode)

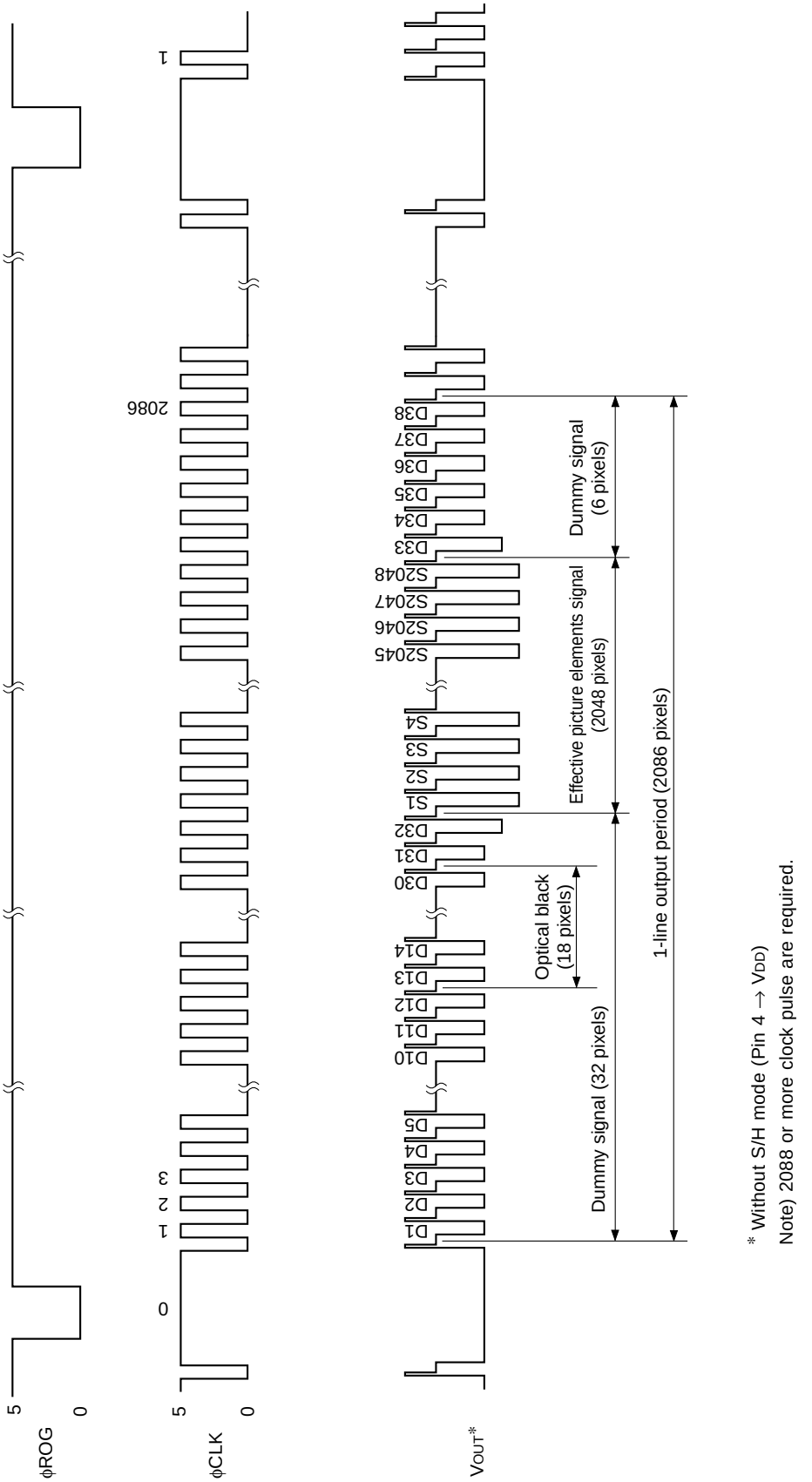

* Without S/H mode (Pin 4 → V_{DD})

Note) 2088 or more clock pulse are required.

Clock Timing Diagram (with S/H mode)

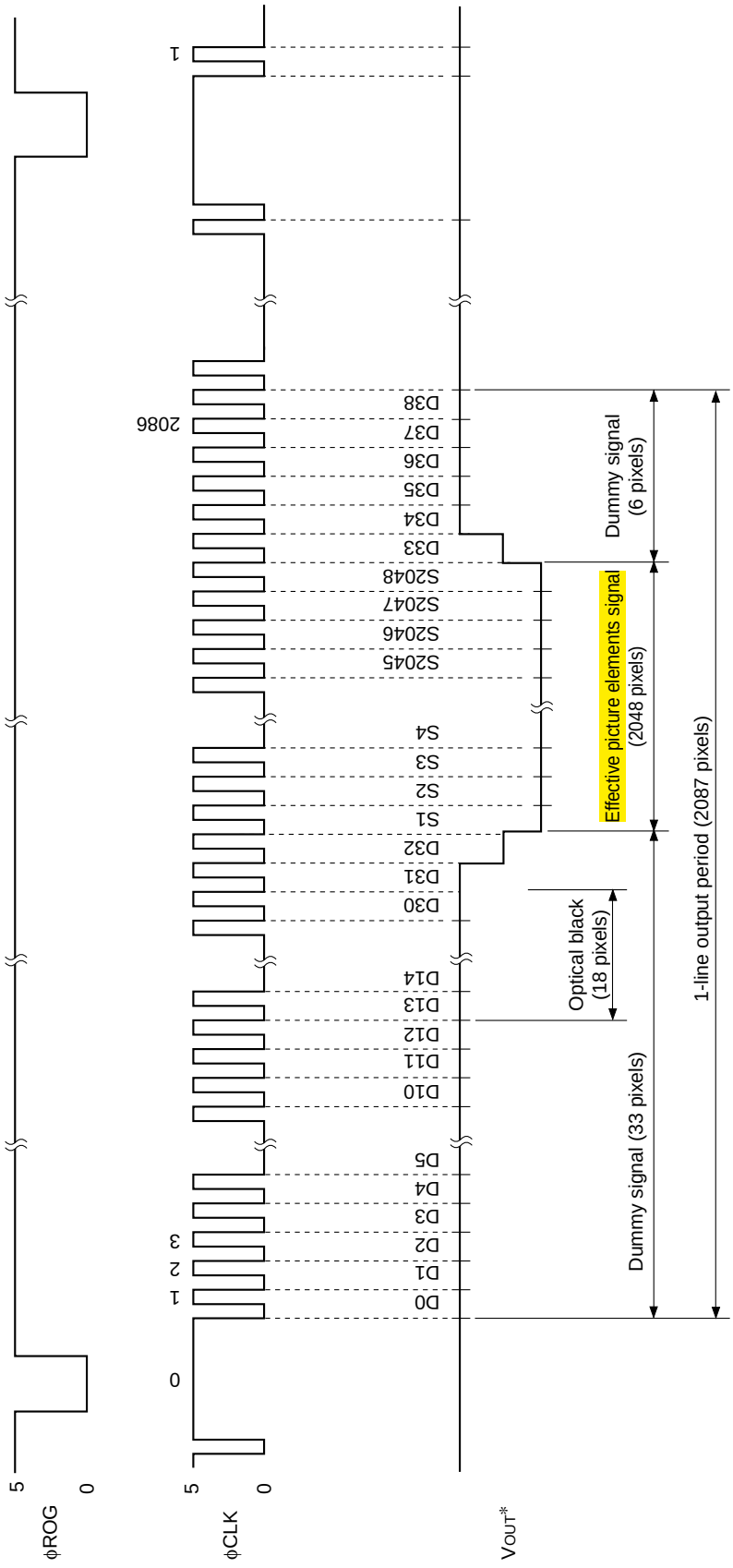

* With S/H mode (Pin 4 → GND)

Note) 2088 or more clock pulse are required.

φCLK Timing (For all modes)

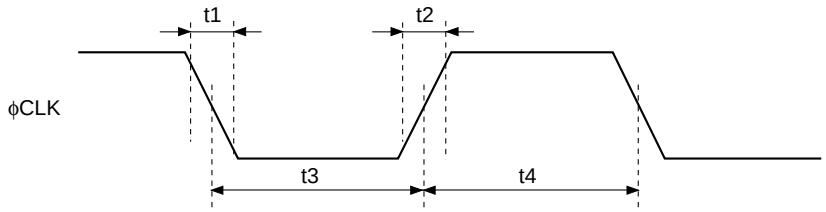

Item	Symbol	Min.	Typ.	Max.	Unit
φCLK pulse rise/fall time	t1, t2	0	10	100	ns
φCLK pulse duty*1	—	40	50	60	%

*1 $100 \times t4 / (t3 + t4)$

φROG, φCLK Timing

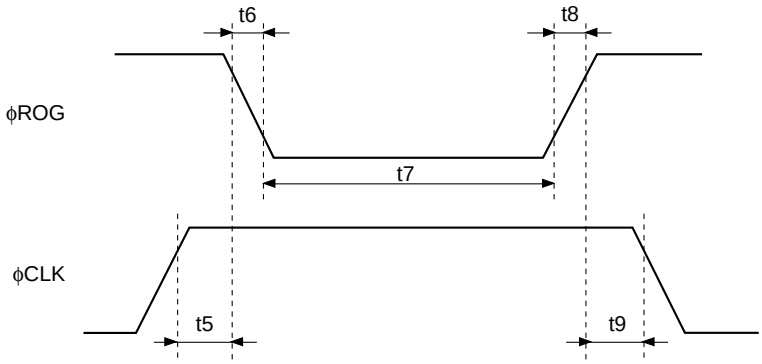

Item	Symbol	Min.	Typ.	Max.	Unit
φROG, φCLK pulse timing 1	t5	0	3000	—	ns
φROG, φCLK pulse timing 2	t9	1000	3000	—	ns
φROG pulse rise/fall time	t6, t8	0	10	—	ns
φROG pulse period	t7	1000	5000	—	ns

φCLK, VOUT Timing (Note 1)

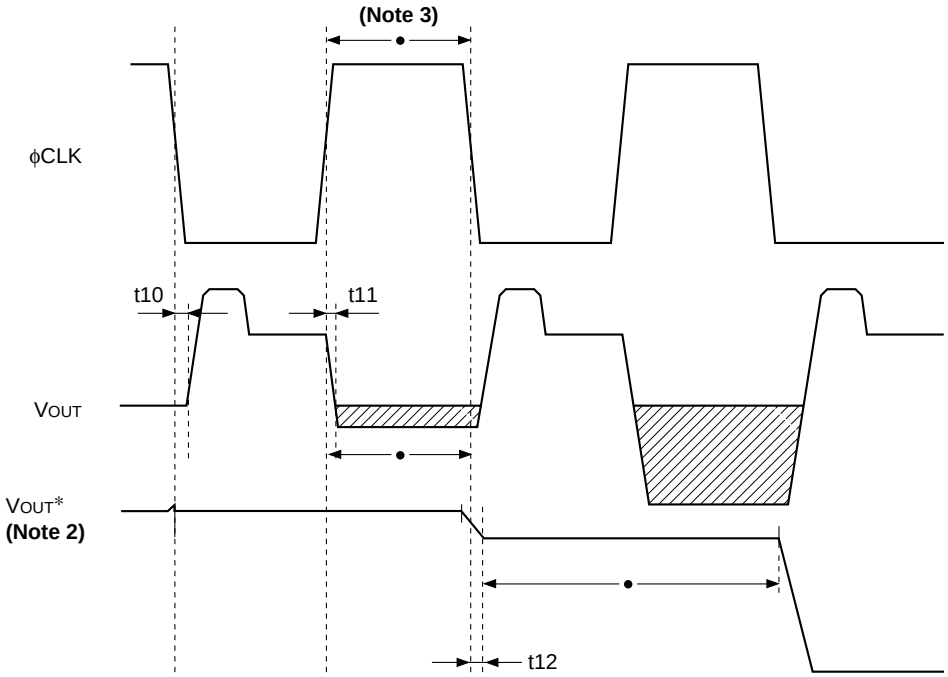

Item	Symbol	Min.	Typ.	Max.	Unit
φCLK-VOUT 1	t10	20	100	250	ns
φCLK-VOUT 2	t11	55	210	410	ns
φCLK-VOUT* (with S/H) 3	t12	20	150	250	ns

Note 1) fck = 1MHz, φCLK pulse duty = 50%, φCLK pulse rise/fall time = 10ns

Note 2) Output waveform when internal S/H is in use.

Note 3) • indicates the correspondence of clock pulse and data period.

Example of Representative Characteristics

Spectral sensitivity (Typ.) (Ta = 25˚C)

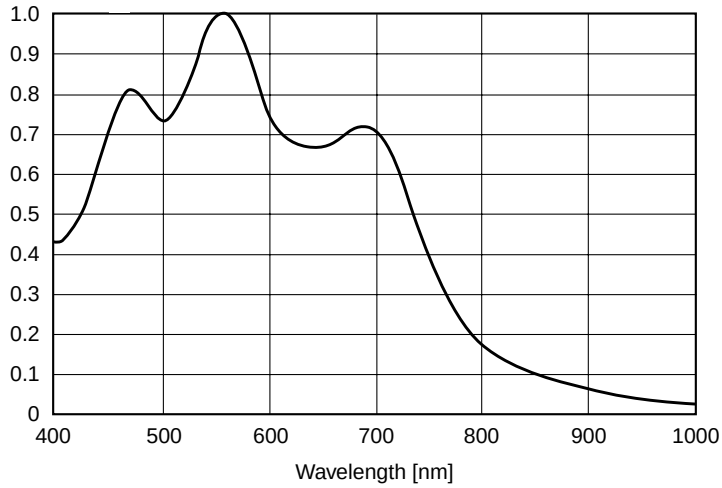

Dark voltage rate vs. Ambient temperature (Typ.)

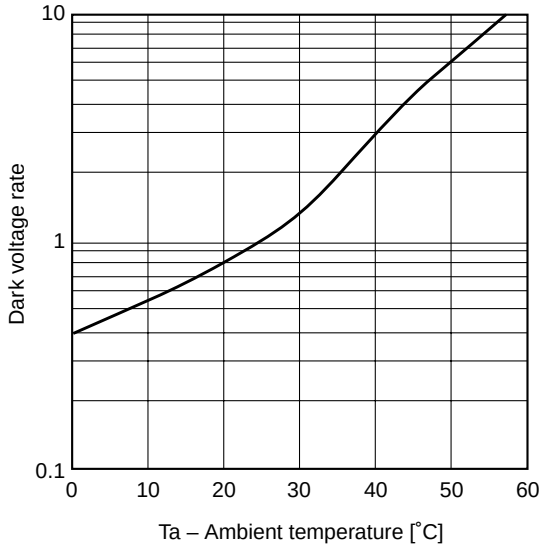

Output voltage rate vs. Integration time (Typ.)

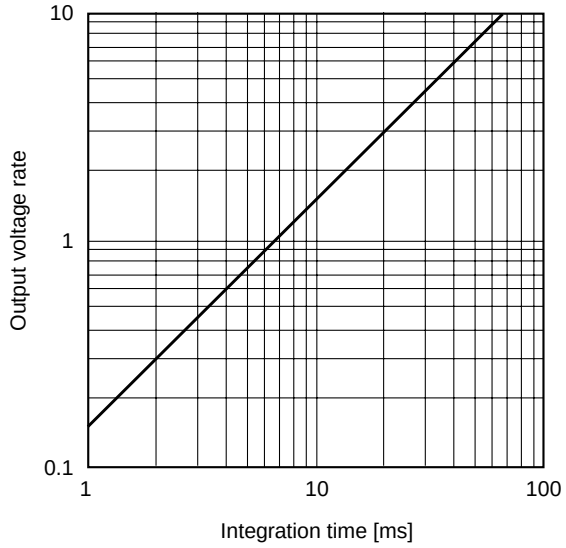

Current consumption rate vs. Clock frequency (Typ.)

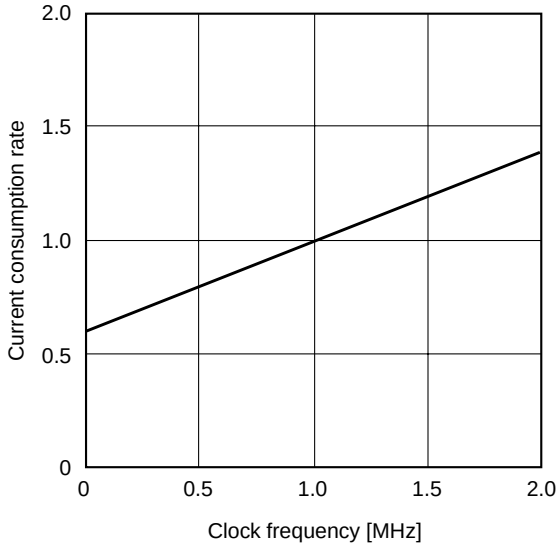

Offset level vs. V_{DD} (Typ.)

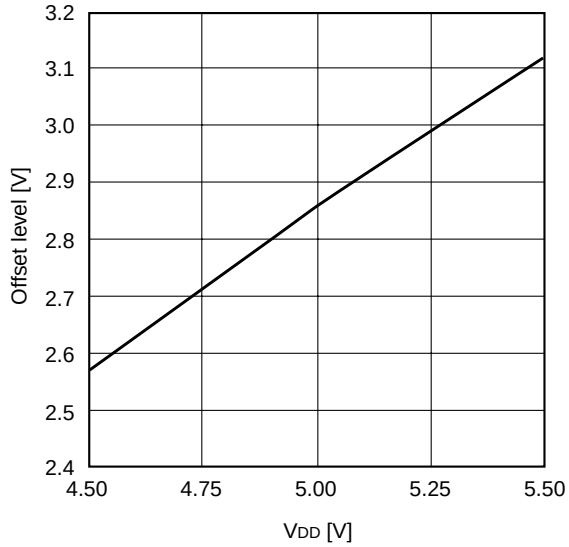

Offset level vs. Ambient temperature (Typ.)

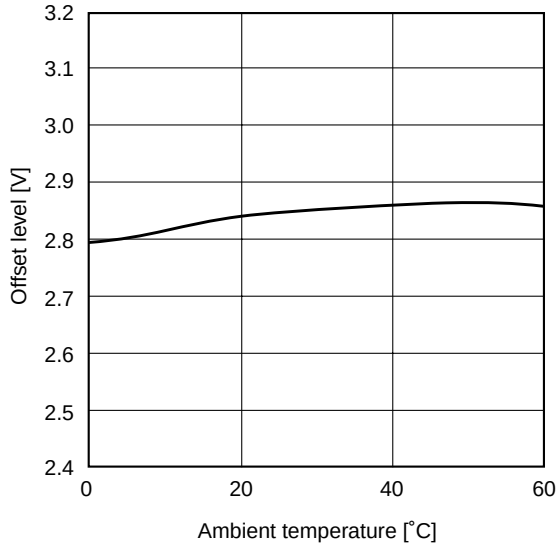

Application Circuit (Without S/H mode) Note)

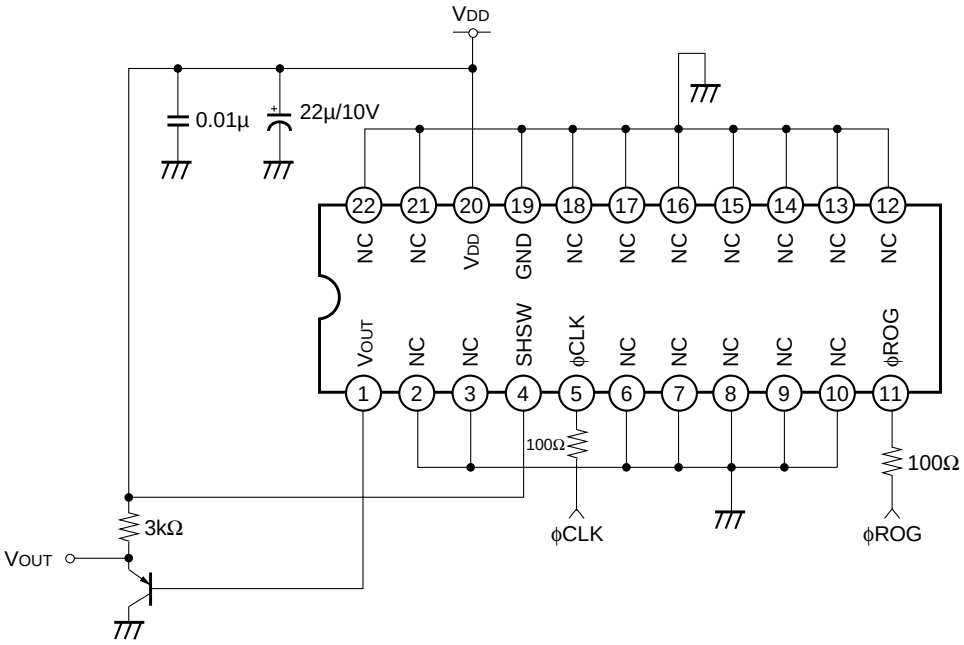

Note) This circuit diagram is the case when internal S/H mode is not used.

Application circuits shown are typical examples illustrating the operation of the devices. Sony cannot assume responsibility for any problems arising out of the use of these circuits or for any infringement of third party patent and other right due to same.

Notes on Handling

1) Static charge prevention

CCD image sensors are easily damaged by static discharge. Before handling, be sure to take the following protective measures.

a) Either handle bare handed or use non-chargeable gloves, clothes or material. Also use conductive shoes.
b) When handling directly use an eath band.
c) Install a conductive mat on the floor or working table to prevent the generation of static electricity.
d) lonized air is recommended for discharge when handling CCD image sensors.
e) For the shipment of mounted substrates use cartons treated for the prevention of static charges.

2) Notes on handling CCD Cer-DIP package

The following points should be observed when handling and installing this package.

a) (1) Compressive strength: 39N/surface
(Do not apply any load more than 0.7mm inside the outer perimeter of the glass portion.)
(2) Shearing strength: 29N/surface
(3) Tensile strength: 29N/surface
(4) Torsional strength: 0.9Nm

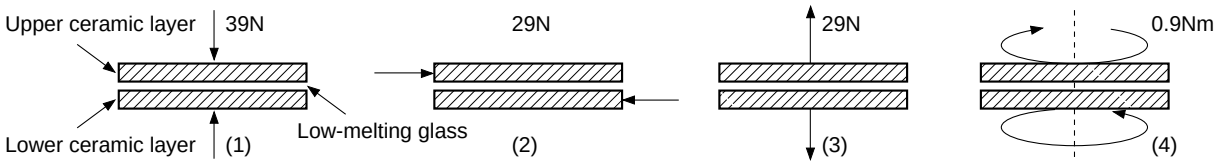

b) In addition, if a load is applied to the entire surface by a hard component, bending stress may be generated and the package may fracture, etc., depending on the flatness of the ceramic portion. Therefore, for installation, either use an elastic load, such as a spring plate, or an adhesive.
c) Be aware that any of the following can cause the glass to crack because the upper and lower ceramic layers are shielded by low-melting glass.
(1) Applying repetitive bending stress to the external leads.
(2) Applying heat to the external leads for an extended period of time with a soldering iron.
(3) Rapid cooling or heating.
(4) Applying a load or impact to a limited portion of the low-melting glass with a small-tipped tool such as tweezers.
(5) Prying the upper or lower ceramic layers away at a support point of the low-melting glass.
Note that the preceding notes should also be observed when removing a component from a board after it has already been soldered.

3) Soldering

a) Make sure the package temperature does not exceed 80°C.
b) Solder dipping in a mounting furnace causes demage to the glass abd other defects. Use a grounded 30W soldering iron and solder each pin in less than 2 seconds. For repairs and remount, cool sufficiently.
c) To dismount image sensors, do not use a solder suction equipment. When using an electric desoldering tool, ground the controller. For the control system, use a zero cross type.

4) Dust and dirt protection
   a) Operate in clean environments.
   b) Do not either touch glass plates by hand or have any object come in contact with glass surfaces. Should dirt stick to a glass surface blow it off with an air blower. (For dirt stuck through static electricity, ionized air is recommended.)
   c) Clean with a cotton bud and ethyl alcohol if the glass surface is grease stained. Be careful not to scratch the glass.
   d) Keep in case to protect from dust and dirt. To prevent dew condensation, preheat or precool when moving to a room with great temperature differences.

5) Exposure to high temperature or humidity will affect the characteristics. Accordingly avoid storage or usage in such conditions.

6) CCD image sensors are precise optical equipment that should not be subject to mechanical shocks.

7) Normal output signal is not obtained immediately after device switch on. Use the output signal added 22500 pulses or above to ϕCLK clock pulse.

Package Outline Unit: mm

22 pin DIP (400mil)

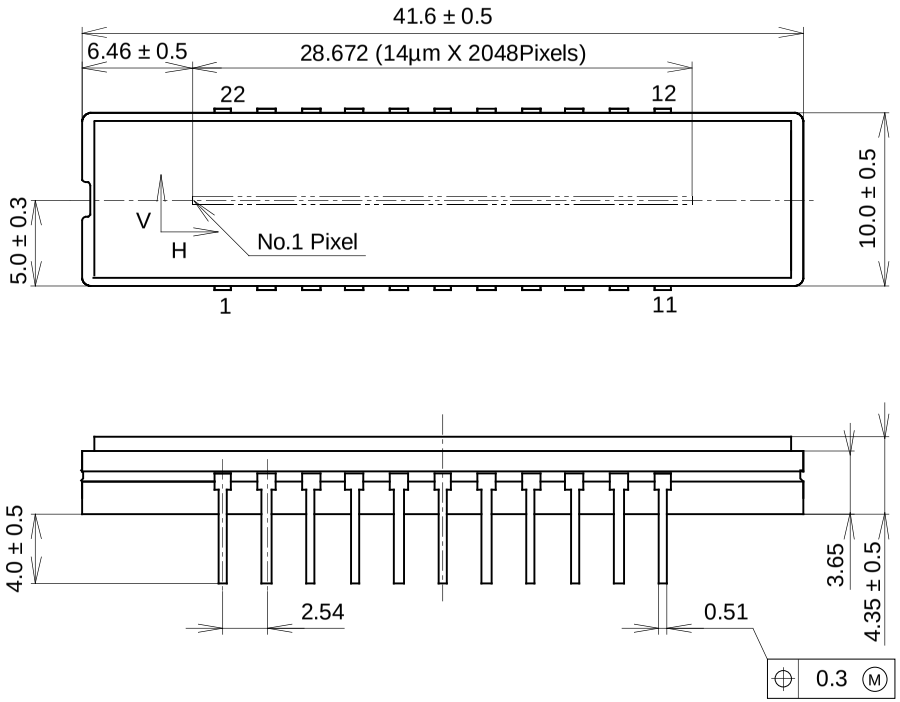

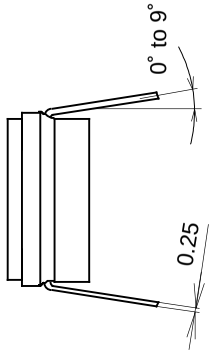

1. The height from the bottom to the sensor surface is 2.45 ± 0.3mm.
2. The thickness of the cover glass is 0.7mm, and the refractive index is 1.5.

PACKAGE STRUCTURE

PACKAGE MATERIAL	Cer-DIP
LEAD TREATMENT	TIN PLATING
LEAD MATERIAL	42 ALLOY
PACKAGE MASS	5.20g
DRAWING NUMBER	LS-A20(E)