SX1276/77/78 - 137 MHz to 1020 MHz Low Power Long Range Transceiver

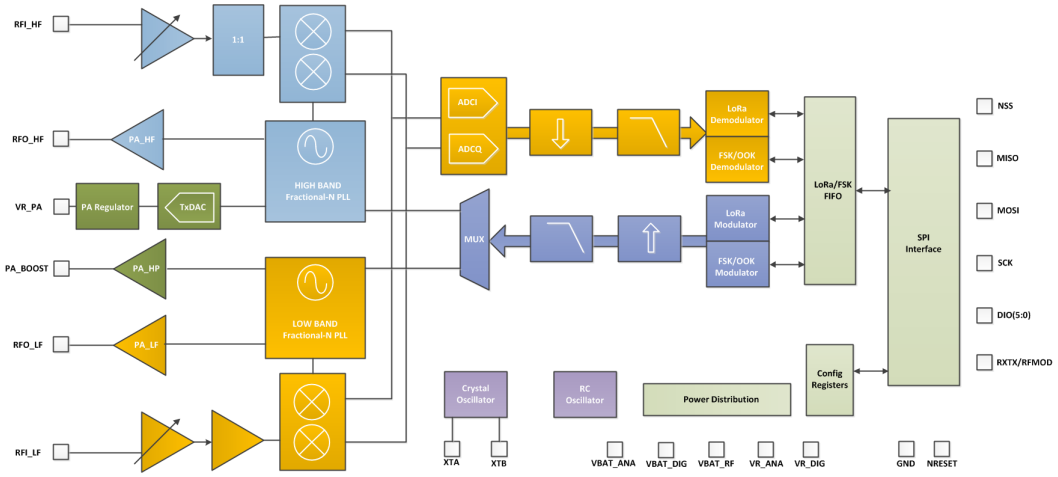

GENERAL DESCRIPTION

The SX1276/77/78 transceivers feature the LoRa™ long range modem that provides ultra-long range spread spectrum communication and high interference immunity whilst minimising current consumption.

Using Semtech's patented LoRa™ modulation technique SX1276/77/78 can achieve a sensitivity of over -148dBm using a low cost crystal and bill of materials. The high sensitivity combined with the integrated +20 dBm power amplifier yields industry leading link budget making it optimal for any application requiring range or robustness. LoRa™ also provides significant advantages in both blocking and selectivity over conventional modulation techniques, solving the traditional design compromise between range, interference immunity and energy consumption.

These devices also support high performance (G)FSK modes for systems including WMBus, IEEE802.15.4g. The SX1276/77/78 deliver exceptional phase noise, selectivity, receiver linearity and IIP3 for significantly lower current consumption than competing devices.

ORDERING INFORMATION

Part Number	Delivery	MOQ / Multiple
SX1276IMLTRT	T&R	3000 pieces
SX1277IMLTRT	T&R	3000 pieces
SX1278IMLTRT	T&R	3000 pieces

- QFN 28 Package - Operating Range [-40;+85°C]
- Pb-free, Halogen free, RoHS/WEEE compliant product

KEY PRODUCT FEATURES

- LoRa™ Modem.
- 168 dB maximum link budget.
- +20 dBm - 100 mW constant RF output vs. V supply.
- +14 dBm high efficiency PA.
- Programmable bit rate up to 300 kbps.
- High sensitivity: down to -148 dBm.
- Bullet-proof front end: IIP3 = -12.5 dBm.
- Excellent blocking immunity.
- Low RX current of 10.3 mA, 200 nA register retention.
- Fully integrated synthesizer with a resolution of 61 Hz.
- FSK, GFSK, MSK, GMSK, LoRa™ and OOK modulation.
- Built-in bit synchronizer for clock recovery.
- Preamble detection.
- 127 dB Dynamic Range RSSI.
- Automatic RF Sense and CAD with ultra-fast AFC.
- Packet engine up to 256 bytes with CRC.
- Built-in temperature sensor and low battery indicator.

APPLICATIONS

- Automated Meter Reading.
- Home and Building Automation.
- Wireless Alarm and Security Systems.
- Industrial Monitoring and Control
- Long range Irrigation Systems

©2013 Semtech Corporation

Table of contents

Section **Page**

1. General Description 9
1.1. Simplified Block Diagram 9
1.2. Product Versions 10
1.3. Pin Diagram 10
1.4. Pin Description 11
2. Electrical Characteristics 12
2.1. ESD Notice 12
2.2. Absolute Maximum Ratings 12
2.3. Operating Range 12
2.4. Chip Specification 13
2.4.1. Power Consumption 13
2.4.2. Frequency Synthesis 13
2.4.3. FSK/OOK Mode Receiver 14
2.4.4. FSK/OOK Mode Transmitter 15
2.4.5. Electrical specification for LoraTM modulation 16
2.4.6. Digital Specification 19
3. SX1276/77/78 Features 20
3.1. LoRaTM Modem 21
3.2. FSK/OOK Modem 21
4. SX1276/77/78 Digital Electronics 22
4.1. The LoRaTM Modem 22
4.1.1. Link Design Using the LoRaTM Modem 23
4.1.2. LoRaTM Digital Interface 29
4.1.3. Operation of the LoRaTM Modem 31
4.1.4. Frequency Settings 32
4.1.5. LoRaTM Modem State Machine Sequences 33
4.2. FSK/OOK Modem 41
4.2.1. Bit Rate Setting 41
4.2.2. FSK/OOK Transmission 42
4.2.3. FSK/OOK Reception 43
4.2.4. Operating Modes in FSK/OOK Mode 50
4.2.5. Startup Times 50
4.2.6. Receiver Startup Options 53
4.2.7. Receiver Restart Methods 54
4.2.8. Top Level Sequencer 55
4.2.9. Data Processing in FSK/OOK Mode 60
4.2.10. FIFO 61
4.2.11. Digital IO Pins Mapping 64
4.2.12. Continuous Mode 65

©2013 Semtech Corporation

Table of contents

Section **Page**

4.2.13. Packet Mode 66
4.2.14. io-homecontrol® Compatibility Mode 74
4.3. SPI Interface 75
5. SX1276/77/78 Analog & RF Frontend Electronics 76
5.1. Power Supply Strategy 76
5.2. Low Battery Detector 76
5.3. Frequency Synthesis 76
5.3.1. Crystal Oscillator 76
5.3.2. CLKOUT Output 77
5.3.3. PLL 77
5.3.4. RC Oscillator 77
5.4. Transmitter Description 78
5.4.1. Architecture Description 78
5.4.2. RF Power Amplifiers 78
5.4.3. High Power +20 dBm Operation 79
5.4.4. Over Current Protection 80
5.5. Receiver Description 80
5.5.1. Overview 80
5.5.2. Receiver Enabled and Receiver Active States 80
5.5.3. Automatic Gain Control In FSK/OOK Mode 80
5.5.4. RSSI in FSK/OOK Mode 81
5.5.5. RSSI in LoRaTM Mode 82
5.5.6. Channel Filter 82
5.5.7. Temperature Measurement 83
6. Description of the Registers 84
6.1. Register Table Summary 84
6.2. FSK/OOK Mode Register Map 87
6.3. Band Specific Additional Registers 100
6.4. LoRaTM Mode Register Map 102
7. Application Information 108
7.1. Crystal Resonator Specification 108
7.2. Reset of the Chip 108
7.2.1. POR 108
7.2.2. Manual Reset 109
7.3. Top Sequencer: Listen Mode Examples 109
7.3.1. Wake on Preamble Interrupt 109
7.3.2. Wake on SyncAddress Interrupt 112
7.4. Top Sequencer: Beacon Mode 115
7.4.1. Timing diagram 115

©2013 Semtech Corporation

Table of contents

Section **Page**

7.4.2. Sequencer Configuration 115
7.5. Example CRC Calculation 117
7.6. Example Temperature Reading 118
8. Packaging Information 119
8.1. Package Outline Drawing 119
8.2. Recommended Land Pattern 120
9. Revision History 121

©2013 Semtech Corporation

Table of contents

Section **Page**

Table 1. SX1276/77/78 Device Variants and Key Parameters 10
Table 2. Absolute Maximum Ratings 12
Table 3. Operating Range 12
Table 4. Power Consumption Specification 13
Table 5. Frequency Synthesizer Specification 13
Table 6. FSK/OOK Receiver Specification 14
Table 7. Transmitter Specification 15
Table 8. LoRa Receiver Specification. 17
Table 9. Digital Specification 19
Table 10. Example LoRaTM Modem Performances 22
Table 11. Range of Spreading Factors 24
Table 12. Cyclic Coding Overhead 24
Table 13. LoRaTM Operating Mode Functionality 31
Table 14. LoRa CAD Consumption Figures 40
Table 15. DIO Mapping LoRaTM Mode 41
Table 16. Bit Rate Examples 42
Table 17. Preamble Detector Settings 48
Table 18. RxTrigger Settings to Enable Timeout Interrupts 49
Table 19. Basic Transceiver Modes 50
Table 20. Receiver Startup Time Summary 51
Table 21. Receiver Startup Options 54
Table 22. Sequencer States 55
Table 23. Sequencer Transition Options 56
Table 24. Sequencer Timer Settings 58
Table 25. Status of FIFO when Switching Between Different Modes of the Chip 62
Table 26. DIO Mapping, Continuous Mode 64
Table 27. DIO Mapping, Packet Mode 64
Table 28. CRC Description 72
Table 29. Power Amplifier Mode Selection Truth Table 78
Table 30. High Power Settings 79
Table 31. Operating Range, +20dBm Operation 79
Table 32. Operating Range, +20dBm Operation 79
Table 33. Trimming of the OCP Current 80
Table 34. LNA Gain Control and Performances 81
Table 35. RssiSmoothing Options 82
Table 36. Available RxBw Settings 82
Table 37. Registers Summary 84
Table 38. Register Map 87
Table 39. Low Frequency Additional Registers 100

©2013 Semtech Corporation

Table of contents

Section **Page**

Table 40. High Frequency Additional Registers 101
Table 41. Crystal Specification 108
Table 42. Listen Mode with PreambleDetect Condition Settings 111
Table 43. Listen Mode with PreambleDetect Condition Recommended DIO Mapping 111
Table 44. Listen Mode with SyncAddress Condition Settings 114
Table 45. Listen Mode with PreambleDetect Condition Recommended DIO Mapping 114
Table 46. Beacon Mode Settings 116
Table 47. Revision History 121

©2013 Semtech Corporation

Table of contents

Section **Page**

Figure 1. Block Diagram 9
Figure 2. Pin Diagrams 10
Figure 3. SX1276/77/78 Block Schematic Diagram 20
Figure 4. LoRaTM Modem Connectivity 23
Figure 5. Interrupts generated in the case of successful frequency hopping communication. 28
Figure 6. Channel activity detection (CAD) time as a function of spreading factor 39
Figure 7. Consumption Profile of the LoRa CAD Process 40
Figure 8. OOK Peak Demodulator Description 44
Figure 9. Floor Threshold Optimization 45
Figure 10. Bit Synchronizer Description 46
Figure 11. FEI Process 47
Figure 12. Startup Process 50
Figure 13. Time to Rssi Sample 52
Figure 14. Tx to Rx Turnaround 52
Figure 15. Rx to Tx Turnaround 52
Figure 16. Receiver Hopping 53
Figure 17. Transmitter Hopping 53
Figure 18. Timer1 and Timer2 Mechanism 57
Figure 19. Sequencer State Machine 59
Figure 20. SX1276/77/78 Data Processing Conceptual View 60
Figure 21. FIFO and Shift Register (SR) 61
Figure 22. FifoLevel IRQ Source Behavior 62
Figure 23. Sync Word Recognition 63
Figure 24. Continuous Mode Conceptual View 65
Figure 25. Tx Processing in Continuous Mode 65
Figure 26. Rx Processing in Continuous Mode 66
Figure 27. Packet Mode Conceptual View 67
Figure 28. Fixed Length Packet Format 68
Figure 29. Variable Length Packet Format 69
Figure 30. Unlimited Length Packet Format 69
Figure 31. Manchester Encoding/Decoding 73
Figure 32. Data Whitening Polynomial 74
Figure 33. SPI Timing Diagram (single access) 75
Figure 34. TCXO Connection 76
Figure 35. RF Front-end Architecture Shows the Internal PA Configuration. 78
Figure 36. Temperature Sensor Response 83
Figure 37. POR Timing Diagram 108
Figure 38. Manual Reset Timing Diagram 109
Figure 39. Listen Mode: Principle 109

©2013 Semtech Corporation

Table of contents

Section **Page**

Figure 40. Listen Mode with No Preamble Received 110
Figure 41. Listen Mode with Preamble Received 110
Figure 42. Wake On PreambleDetect State Machine 111
Figure 43. Listen Mode with no SyncAddress Detected 112
Figure 44. Listen Mode with Preamble Received and no SyncAddress 112
Figure 45. Listen Mode with Preamble Received & Valid SyncAddress 113
Figure 46. Wake On SyncAddress State Machine 113
Figure 47. Beacon Mode Timing Diagram 115
Figure 48. Beacon Mode State Machine 115
Figure 49. Example CRC Code 117
Figure 50. Example Temperature Reading 118
Figure 51. Package Outline Drawing 119
Figure 52. Recommended Land Pattern 120

©2013 Semtech Corporation

1. General Description

The SX1276/77/78 incorporates the LoRa™ spread spectrum modem which is capable of achieving significantly longer range than existing systems based on FSK or OOK modulation. With this new modulation scheme sensitivities 8 dB better than FSK can be achieved with a low-cost, low-tolerance, crystal reference. This increase in link budget provides much longer range and robustness without the need for external amplification. LoRa™ also provides significant advances in selectivity and blocking performance, further improving communication reliability. For maximum flexibility the user may decide on the spread spectrum modulation bandwidth (BW), spreading factor (SF) and error correction rate (CR). Another benefit of the spread modulation is that each spreading factor is orthogonal - thus multiple transmitted signals can occupy the same channel without interfering. This also permits simple coexistence with existing FSK based systems. Standard GFSK, FSK, OOK, and GMSK modulation is also provided to allow compatibility with existing systems or standards such as wireless MBUS and IEEE 802.15.4g.

The SX1276 offers bandwidth options ranging from 7.8 kHz to 500 kHz with spreading factors ranging from 6 to 12, and covering all available frequency bands. The SX1277 offers the same bandwidth and frequency band options with spreading factors from 6 to 9. The SX1278 offers and bandwidths and spreading factor options, but only covers the lower UHF bands.

1.1. Simplified Block Diagram

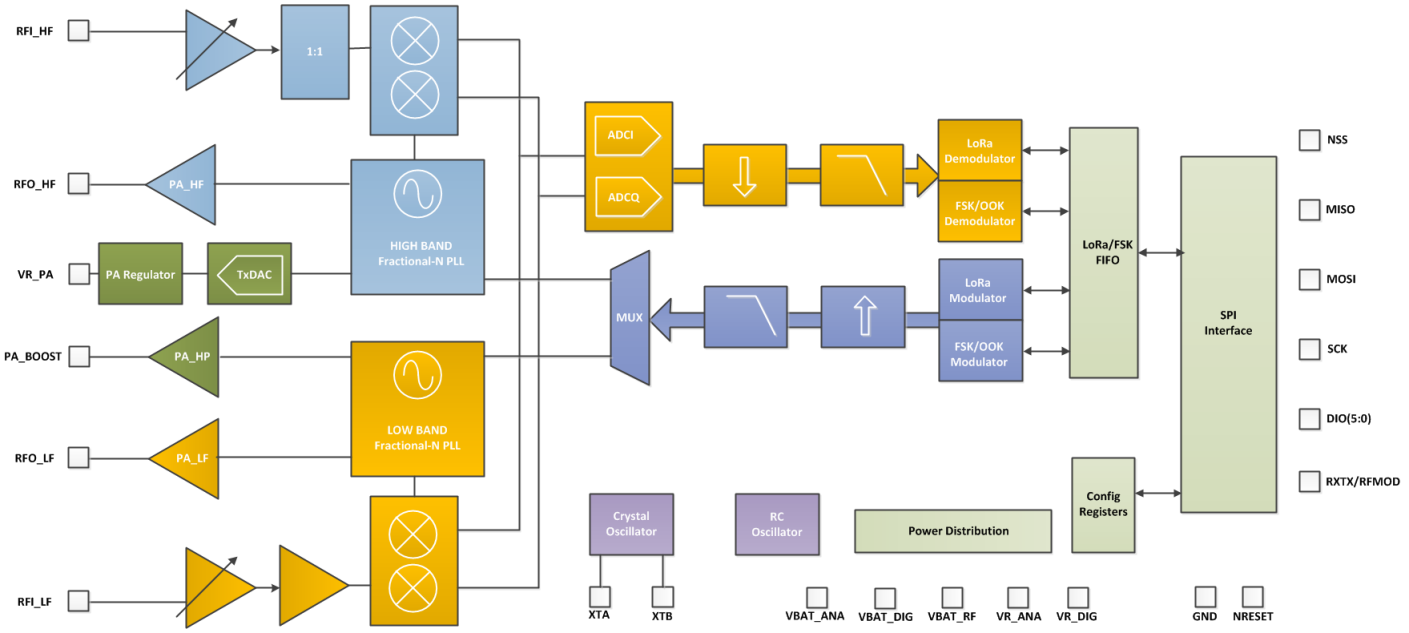

Figure 1. Block Diagram

©2013 Semtech Corporation

1.2. Product Versions

The features of the three product variants are detailed in the following table.

Table 48 SX1276/77/78 Device Variants and Key Parameters

Part Number	Frequency Range	Spreading Factor	Bandwidth	Effective Bitrate	Est. Sensitivity
SX1276	137 - 1020 MHz	6 - 12	7.8 - 500 kHz	.018 - 37.5 kbps	-111 to -148 dBm
SX1277	137 - 1020 MHz	6 - 9	7.8 - 500 kHz	0.11 - 37.5 kbps	-111 to -139 dBm
SX1278	137 - 525 MHz	6- 12	7.8 - 500 kHz	.018 - 37.5 kbps	-111 to -148 dBm

1.3. Pin Diagram

The following diagram shows the pin arrangement of the QFN package, top view.

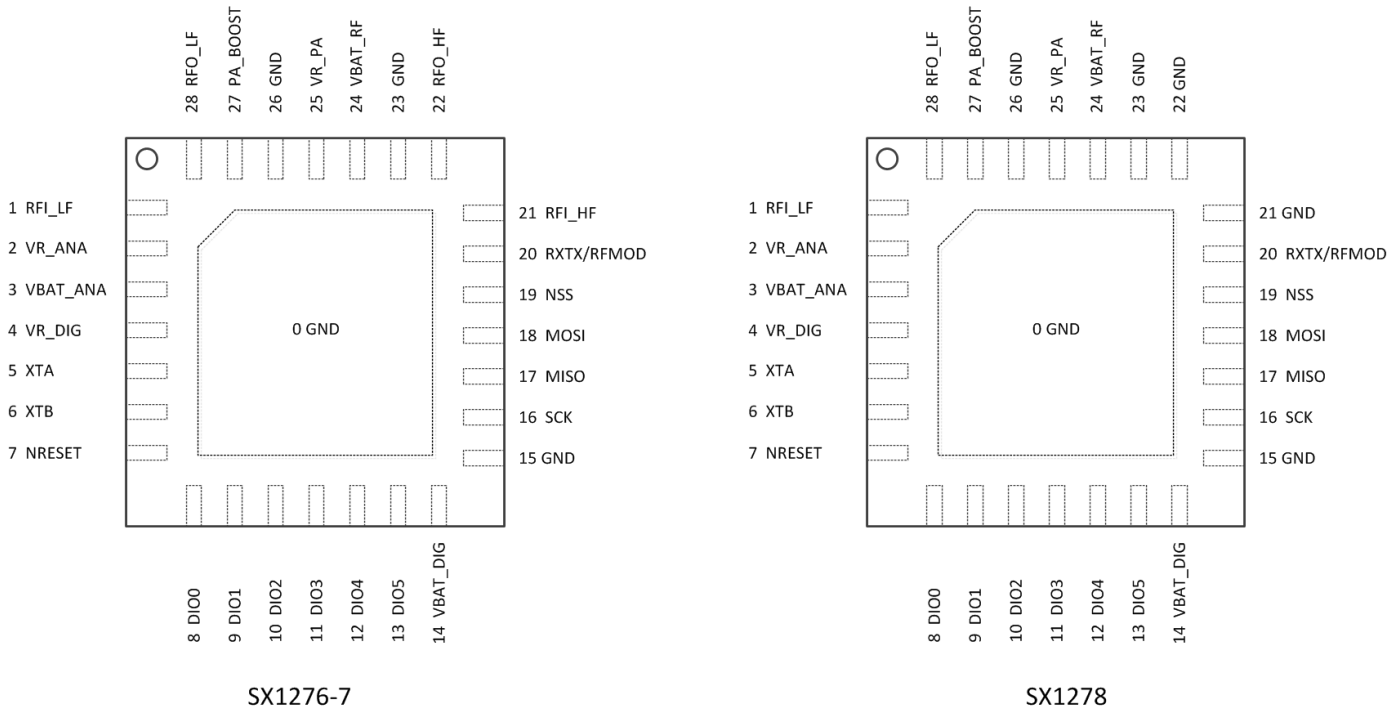

Figure 2. Pin Diagrams

©2013 Semtech Corporation

1.4. Pin Description

Number	Name	Type	Description
0	GROUND	-	Exposed ground pad.
1	RFI_LF	I	RF input for lower bands
2	VR_ANA	-	Regulated supply voltage for analogue circuitry
3	VBAT_ANA	-	Supply voltage for analogue circuitry
4	VR_DIG	-	Regulated supply voltage for digital blocks
5	XTA	I/O	XTAL connection or TCXO input
6	XTB	I/O	XTAL connection.
7	NRESET	I/O	Reset trigger input.
8	DIO0	I/O	Digital I/O, software configured.
9	DIO1/DCLK	I/O	Digital I/O, software configured.
10	DIO2/DATA	I/O	Digital I/O, software configured.
11	DIO3	I/O	Digital I/O, software configured.
12	DIO4	I/O	Digital I/O, software configured.
13	DIO5	I/O	Digital I/O, software configured.
14	VBAT_DIG	-	Supply voltage for digital blocks
15	GND	-	Ground
16	SCK	I	SPI Clock input
17	MISO	O	SPI Data output
18	MOSI	I	SPI Data input
19	NSS	I	SPI Chip select input
20	RXTX/RF_MOD	O	Rx/Tx switch control: high in Tx
21	RFI_HF	I	RF input for upper bands
22	RFO_HF	O	RF output for upper bands
23	GND	-	Ground
24	VBAT_RF	-	Supply voltage for RF blocks
25	VR_PA	-	Regulated supply for the PA
26	GND	-	Ground
27	PA_BOOST	O	Optional high-power PA output, lower or upper bands
28	RFO_LF	O	RF output for lower bands

©2013 Semtech Corporation

2. Electrical Characteristics



2.1. ESD Notice

The SX1276/77/78 is a high performance radio frequency device. It satisfies:

- Class 2 of the JEDEC standard JESD22-A114-B (Human Body Model) on all pins.
- Class III of the JEDEC standard JESD22-C101C (Charged Device Model) on all pins

It should thus be handled with all the necessary ESD precautions to avoid any permanent damage.

2.2. Absolute Maximum Ratings

Stresses above the values listed below may cause permanent device failure. Exposure to absolute maximum ratings for extended periods may affect device reliability.

Table 49 Absolute Maximum Ratings

Symbol	Description	Min	Max	Unit
VDDmr	Supply Voltage	-0.5	3.9	V
Tmr	Temperature	-55	+115	° C
Tj	Junction temperature	-	+125	° C
Pmr	RF Input Level	-	+10	dBm

Note Specific ratings apply to +20 dBm operation (see Section 5.4.3).

2.3. Operating Range

Table 50 Operating Range

Symbol	Description	Min	Max	Unit
VDDop	Supply voltage	1.8	3.7	V
Top	Operational temperature range	-40	+85	°C
Clop	Load capacitance on digital ports	-	25	pF
ML	RF Input Level	-	+10	dBm

Note A specific supply voltage range applies to +20 dBm operation (see Section 5.4.3).

©2013 Semtech Corporation

2.4. Chip Specification

The tables below give the electrical specifications of the transceiver under the following conditions: Supply voltage VDD=3.3 V, temperature = 25 °C, *FXOSC* = 32 MHz, F_{RF} = 169/434/868/915 MHz (see specific indication), Pout = +13dBm, 2-level FSK modulation without pre-filtering, FDA = 5 kHz, Bit Rate = 4.8 kb/s and terminated in a matched 50 Ohm impedance, shared Rx and Tx path matching., unless otherwise specified.

2.4.1. Power Consumption

Table 51 Power Consumption Specification

Symbol	Description	Conditions	Min	Typ	Max	Unit
IDDSL	Supply current in Sleep mode		-	0.2	1	uA
IDDIDLE	Supply current in Idle mode	RC oscillator enabled	-	1.5	-	uA
IDDST	Supply current in Standby mode	Crystal oscillator enabled	-	1.6	1.8	mA
IDDFS	Supply current in Synthesizer mode	FSRx	-	5.8	-	mA
IDDR	Supply current in Receive mode	*LnaBoost* Off, higher bands *LnaBoost* On, higher bands Lower bands	- - -	10.8 11.5 12.1	- - -	mA
IDDT	Supply current in Transmit mode with impedance matching	RFOP = +20 dBm, on PA_BOOST RFOP = +17 dBm, on PA_BOOST RFOP = +13 dBm, on RFO_LF/HF pin RFOP = + 7 dBm, on RFO_LF/HF pin	- - - -	120 87 29 20	- - - -	mA mA mA mA

2.4.2. Frequency Synthesis

Table 52 Frequency Synthesizer Specification

Symbol	Description	Conditions	Min	Typ	Max	Unit
FR	Synthesizer frequency range	Programmable	137 410 862	- - -	175 525 1020	MHz
FXOSC	Crystal oscillator frequency		-	32	-	MHz
TS_OSC	Crystal oscillator wake-up time		-	250	-	us
TS_FS	Frequency synthesizer wake-up time to PllLock signal	From Standby mode	-	60	-	us
TS_HOP	Frequency synthesizer hop time at most 10 kHz away from the target frequency	200 kHz step 1 MHz step 5 MHz step 7 MHz step 12 MHz step 20 MHz step 25 MHz step	- - - - - - -	20 20 50 50 50 50 50	- - - - - - -	us us us us us us us
FSTEP	Frequency synthesizer step	FSTEP = FXOSC/2^{19}	-	61.0	-	Hz

©2013 Semtech Corporation

FRC	RC Oscillator frequency	After calibration	-	62.5	-	kHz
BRF	Bit rate, FSK	Programmable values (1)	1.2	-	300	kbps
BRO	Bit rate, OOK	Programmable	1.2	-	32.768	kbps
BRA	Bit Rate Accuracy	ABS(wanted BR - available BR)	-	-	250	ppm
FDA	Frequency deviation, FSK (1)	Programmable FDA + BRF/2 =< 250 kHz	0.6	-	200	kHz

Note For Maximum Bit rate the maximum modulation index is 0.5.

2.4.3. FSK/OOK Mode Receiver

All receiver tests are performed with RxBw = 10 kHz (Single Side Bandwidth) as programmed in *RegRxBw*, receiving a PN15 sequence. Sensitivities are reported for a 0.1% BER (with Bit Synchronizer enabled), unless otherwise specified. Blocking tests are performed with an unmodulated interferer. The wanted signal power for the Blocking Immunity, ACR, IIP2, IIP3 and AMR tests is set 3 dB above the receiver sensitivity level.

Table 53 FSK/OOK Receiver Specification

Symbol	Description	Conditions	Min	Typ	Max	Unit
RFS_F_LF	Direct tie of RFI and RFO pins, shared Rx, Tx paths FSK sensitivity, highest LNA gain. Lower frequency bands	FDA = 5 kHz, BR = 1.2 kb/s FDA = 5 kHz, BR = 4.8 kb/s FDA = 40 kHz, BR = 38.4 kb/s* FDA = 20 kHz, BR = 38.4 kb/s** FDA = 62.5 kHz, BR = 250 kb/s***	- - - - -	-121 -117 -107 -108 -95	- - - - -	dBm dBm dBm dBm dBm
	Split RF paths, the RF switch insertion loss is not accounted for. Lower frequency bands	FDA = 5 kHz, BR = 1.2 kb/s FDA = 5 kHz, BR = 4.8 kb/s FDA = 40 kHz, BR = 38.4 kb/s* FDA = 20 kHz, BR = 38.4 kb/s** FDA = 62.5 kHz, BR = 250 kb/s***	- - - - -	-123 -119 -109 -110 -97	- - - - -	dBm dBm dBm dBm dBm
RFS_F_HF	Direct tie of RFI and RFO pins, shared Rx, Tx paths FSK sensitivity, highest LNA gain. Higher frequency bands	FDA = 5 kHz, BR = 1.2 kb/s FDA = 5 kHz, BR = 4.8 kb/s FDA = 40 kHz, BR = 38.4 kb/s* FDA = 20 kHz, BR = 38.4 kb/s** FDA = 62.5 kHz, BR = 250 kb/s***	- - - - -	-119 -115 -105 -105 -92	- - - - -	dBm dBm dBm dBm dBm
	Split RF paths, LnaBoost is turned on, the RF switch insertion loss is not accounted for. Higher frequency bands	FDA = 5 kHz, BR = 1.2 kb/s FDA = 5 kHz, BR = 4.8 kb/s FDA = 40 kHz, BR = 38.4 kb/s* FDA = 20 kHz, BR = 38.4 kb/s** FDA = 62.5 kHz, BR = 250 kb/s***	- - - - -	-123 -119 -109 -109 -96	- - - - -	dBm dBm dBm dBm dBm
RFS_O	OOK sensitivity, highest LNA gain shared Rx, Tx paths	BR = 4.8 kb/s BR = 32 kb/s	- -	-117 -108	- -	dBm dBm
CCR	Co-Channel Rejection		-	-9	-	dB

©2013 Semtech Corporation

ACR	Adjacent Channel Rejection	FDA = 5 kHz, BR=4.8kb/s Offset = +/- 25 kHz or +/- 50kHz 169MHz Band 434 MHz Band 8-900 MHz Band	 - - -	 59 56 50	 - - -	 dB dB dB
BI_HF	Blocking Immunity, higher bands	Offset = +/- 1 MHz Offset = +/- 2 MHz Offset = +/- 10 MHz	- - -	71 76 84	- - -	dB dB dB
BI_LF	Blocking Immunity, lower bands	Offset = +/- 1 MHz Offset = +/- 2 MHz Offset = +/- 10 MHz	- - -	71 72 78	- - -	dB dB dB
IIP2	2nd order Input Intercept Point Unwanted tones are 20 MHz above the LO	Highest LNA gain	-	+55	-	dBm
IIP3_HF	3rd order Input Intercept point Unwanted tones are 1MHz and 1.995 MHz above the LO	Higher bands Highest LNA gain G1 LNA gain G2, 4dB sensitivity hit	 - -	 -12.5 -8.5	 - -	 dBm dBm
IIP3_LF	3rd order Input Intercept point Unwanted tones are 1MHz and 1.995 MHz above the LO	Lower bands Highest LNA gain G1 LNA gain G2, 2.5dB sensitivity hit	 - -	 -22 -16	 - -	 dBm dBm
BW_SSB	Single Side channel filter BW	Programmable	2.7	-	250	kHz
IMR	Image Rejection	Wanted signal 3dB over sensitivity BER=0.1%	-	48	-	dB
IMA	Image Attenuation		-	57	-	dB
DR_RSSI	RSSI Dynamic Range	AGC enabled Min Max	- -	-127 0	- -	dBm dBm

* *RxBw = 83 kHz (Single Side Bandwidth)*

** *RxBw = 50 kHz (Single Side Bandwidth)*

*** *RxBw = 250 kHz (Single Side Bandwidth)*

2.4.4. FSK/OOK Mode Transmitter

Table 54 Transmitter Specification

Symbol	Description	Conditions	Min	Typ	Max	Unit
RF_OP	RF output power in 50 ohms on RFO pin (High efficiency PA).	Programmable with steps Max Min	 +11 -	 +14 -1	 - -	 dBm dBm
ΔRF_OP_V	RF output power stability on RFO pin versus voltage supply.	VDD = 2.5 V to 3.3 V VDD = 1.8 V to 3.7 V	- -	3 8	- -	dB dB
RF_OPH	RF output power in 50 ohms, on PA_BOOST pin (Regulated PA).	Programmable with 1dB steps Max Min	- -	+17 +2	- -	dBm dBm

©2013 Semtech Corporation

RF_OPH_MAX	Max RF output power, on PA_BOOST pin	High power mode	-	+20	-	dBm
ΔRF_OPH_V	RF output power stability on PA_-BOOST pin versus voltage supply.	VDD = 2.4 V to 3.7 V	-	+/-1	-	dB
ΔRF_T	RF output power stability versus temperature on PA_BOOST pin.	From T = -40 °C to +85 °C	-	+/-1	-	dB
PHN	Transmitter Phase Noise	169 MHz band				
		10kHz Offset	-	-118	-	dBc/Hz
		50kHz Offset	-	-118	-	
		400kHz Offset	-	-128	-	
		1MHz Offset	-	-132	-	
		433 MHz band				
		10kHz Offset	-	-109	-	dBc/Hz
		50kHz Offset	-	-109	-	
		400kHz Offset	-	-121	-	
		1MHz Offset	-	-128	-	
		868/915 MHz band				
		10kHz Offset	-	-103	-	dBc/Hz
		50kHz Offset	-	-103	-	
		400kHz Offset	-	-115	-	
		1MHz Offset	-	-122	-	
ACP	Transmitter adjacent channel power (measured at 25 kHz offset)	BT=1. Measurement conditions as defined by EN 300 220-1 V2.3.1	-	-	-37	dBm
TS_TR	Transmitter wake up time, to the first rising edge of DCLK	Frequency Synthesizer enabled, *PaRamp* = 10us, BR = 4.8 kb/s	-	120	-	us

2.4.5. Electrical specification for Lora™ modulation

The table below gives the electrical specifications for the transceiver operating with Lora™ modulation. Following conditions apply unless otherwise specified:

- Supply voltage = 3.3 V.
- Temperature = 25° C.
- f_{XOSC} = 32 MHz.
- Lower bands: 169 MHz and 433 MHz, higher bands: 868 and 915 MHz
- bandwidth (BW) = 125 kHz.
- Spreading Factor (SF) = 12.
- Error Correction Code (EC) = 4/6.
- Packet Error Rate (PER)= 1%
- CRC on payload enabled.
- Output power = 13 dBm in transmission.
- Payload length = 64 bytes.
- Preamble Length = 12 symbols (programmed register *PreambleLength=8*)
- With matched impedances

©2013 Semtech Corporation

Table 55 LoRa Receiver Specification.

Symbol	Description	Conditions	Min.	Typ	Max	Unit
IDDR_L	Supply current in receiver Lora™ mode, LnaBoost off	Lower Bands, Lower BW Lower Bands, BW = 125 kHz Lower Bands, BW = 250 kHz Lower Bands, BW = 500 kHz	- - - -	TBC 11.5 12.4 13.8	- - - -	mA mA mA mA
		Higher Bands, Lower BW Higher Bands, BW = 125 kHz Higher Bands, BW = 250 kHz Higher Bands, BW = 500 kHz	- - - -	TBC 10.3 11.1 12.6	- - - -	mA mA mA mA
IDDT_L	Supply current in transmitter mode	RFOP = 13 dBm RFOP = 7 dBm	- -	28 20	- -	mA mA
IDDT_H_L	Supply current in transmitter mode with an external impedance transformation	Using PA_BOOST pin RFOP = 17 dBm	-	90	-	mA
BI_L	Blocking immunity, FRF=868 MHz CW interferer	offset = +/- 1 MHz offset = +/- 2 MHz offset = +/- 10 MHz	-	TBC TBC TBC		dB dB dB
IIP3_L_HF	3rd order Input Intercept point Unwanted tones are 1MHz and 1.995 MHz above the LO	Higher bands Highest LNA gain G1 LNA gain G2, 4dB sensitivity hit	- -	-12.5 -8.5	- -	dBm dBm
IIP3_L_LF	3rd order Input Intercept point Unwanted tones are 1MHz and 1.995 MHz above the LO	Lower bands Highest LNA gain G1 LNA gain G2, 2.5dB sensitivity hit	- -	-22 -16	- -	dBm dBm
IIP2_L	2nd order input intercept point, highest LNA gain, FRF=868 MHz, CW interferer.	F1 = FRF + 20 MHz F2 = FRF+ 20 MHz + Δf	-	+55	-	dBm
BR_L	Bit rate, Long-Range Mode	From SF6, BW=500kHz to SF12, BW=7.8kHz	0.018	-	37.5	kbps
RFS_L10	RF sensitivity, Long-Range Mode, highest LNA gain, LNA boost for higher bands, using split Rx/Tx path 10.4 kHz bandwidth	SF = 6 SF = 7 SF = 8 SF = 9 SF = 10 SF = 11 SF = 12	- - - - - - -	TBC -134 TBC TBC TBC TBC TBC	- - - - - - -	dBm dBm dBm dBm dBm dBm dBm
RFS_L62	RF sensitivity, Long-Range Mode, highest LNA gain, LNA boost for higher bands, using split Rx/Tx path 62.5 kHz bandwidth	SF = 6 SF = 7 SF = 8 SF = 9 SF = 10 SF = 11 SF = 12	- - - - - - -	-121 -126 -129 -132 -135 -137 -139	- - - - - - -	dBm dBm dBm dBm dBm dBm dBm

Table 56. Electrical specifications: Lora™ mode

©2013 Semtech Corporation

Symbol	Description	Conditions	Min.	Typ	Max	Unit
RFS_L125	RF sensitivity, Long-Range Mode, highest LNA gain, LNA boost for higher bands, using split Rx/Tx path 125 kHz bandwidth	SF = 6 SF = 7 SF = 8 SF = 9 SF = 10 SF = 11 SF = 12	- - - - - - -	-118 -123 -126 -129 -132 -133 -136	- - - - - - -	dBm dBm dBm dBm dBm dBm dBm
RFS_L250	RF sensitivity, Long-Range Mode, highest LNA gain, LNA boost for higher bands, using split Rx/Tx path 250 kHz bandwidth	SF = 6 SF = 7 SF = 8 SF = 9 SF = 10 SF = 11 SF = 12	- - - - - - -	-115 -120 -123 -125 -128 -130 -133	- - - - - - -	dBm dBm dBm dBm dBm dBm dBm
RFS_L500	RF sensitivity, Long-Range Mode, highest LNA gain, LNA boost for higher bands, using split Rx/Tx path 500 kHz bandwidth	SF = 6 SF = 7 SF = 8 SF = 9 SF = 10 SF = 11 SF = 12	- - - - - - -	-111 -116 -119 -122 -125 TBC TBC	- - - - - - -	dBm dBm dBm dBm dBm dBm dBm
CCR_LCW	Co-channel rejection Single CW tone = Sens +6 dB 1% PER	SF = 7 SF = 8 SF = 9 SF = 10 SF = 11 SF = 12	- - - - - -	5 9.5 12 14.4 17 19.5	- - - - - -	dB dB dB dB dB dB
CCR_LL	Co-channel rejection	Interferer is a LoRa™ signal using same BW and same SF. Pw = Sensitivity + 3 dB		-6		dB
ACR_LCW	Adjacent channel rejection	Interferer is 1.5*BW_L from the wanted signal center frequency 1% PER, Single CW tone = Sens + 3 dB SF = 7 SF = 12	 - -	 60 72	 - -	 dB dB
IMR_LCW	Image rejection after calibration.	1% PER, Single CW tone = Sens +3 dB	-	66	-	dB
FERR_L	Maximum tolerated frequency offset between transmitter and receiver, no sensitivity degradation, SF6 thru 9	BW_L = 10.4 kHz BW_L = 62.5 kHz BW_L = 125 kHz BW_L = 250 kHz BW_L = 500 kHz	-2.5 -15 -30 -60 -120	- - - - -	2.5 15 30 60 120	kHz kHz kHz kHz kHz
	Maximum tolerated frequency offset between transmitter and receiver, no sensitivity degradation, SF10 thru 11	SF = 12 SF = 11 SF = 10	-50 -100 -200	- - -	50 100 200	ppm ppm ppm

Table 56. Electrical specifications: Lora™ *mode*

©2013 Semtech Corporation

2.4.6. Digital Specification

Conditions: Temp = 25° C, VDD = 3.3 V, FXOSC = 32 MHz, unless otherwise specified.

Table 57 Digital Specification

Symbol	Description	Conditions	Min	Typ	Max	Unit
V_{IH}	Digital input level high		0.8	-	-	VDD
V_{IL}	Digital input level low		-	-	0.2	VDD
V_{OH}	Digital output level high	Imax = 1 mA	0.9	-	-	VDD
V_{OL}	Digital output level low	Imax = -1 mA	-	-	0.1	VDD
F_{SCK}	SCK frequency		-	-	10	MHz
t_{ch}	SCK high time		50	-	-	ns
t_{cl}	SCK low time		50	-	-	ns
t_{rise}	SCK rise time		-	5	-	ns
t_{fall}	SCK fall time		-	5	-	ns
t_{setup}	MOSI setup time	From MOSI change to SCK rising edge.	30	-	-	ns
t_{hold}	MOSI hold time	From SCK rising edge to MOSI change.	20	-	-	ns
t_{nsetup}	NSS setup time	From NSS falling edge to SCK rising edge.	30	-	-	ns
t_{nhold}	NSS hold time	From SCK falling edge to NSS rising edge, normal mode.	100	-	-	ns
t_{nhigh}	NSS high time between SPI accesses		20	-	-	ns
T_DATA	DATA hold and setup time		250	-	-	ns

©2013 Semtech Corporation

3. SX1276/77/78 Features

This section gives a high-level overview of the functionality of the SX1276/77/78 low-power, highly integrated transceiver. The following figure shows a simplified block diagram of the SX1276/77/78.

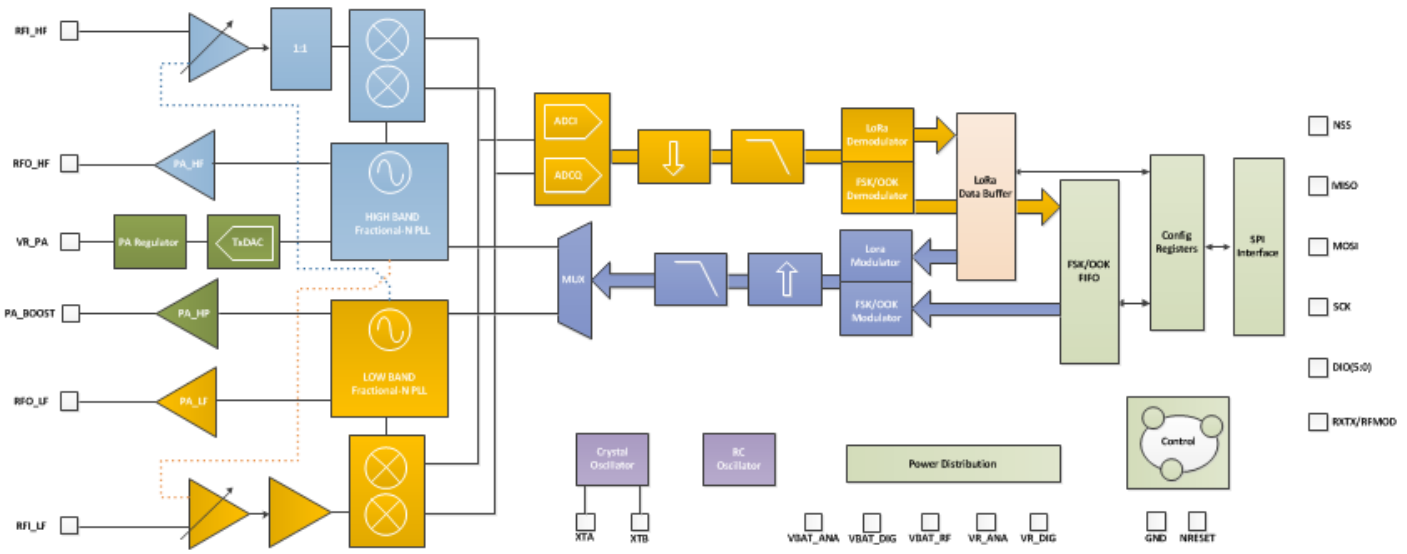

Figure 3. SX1276/77/78 Block Schematic Diagram

SX1276/77/78 is a half-duplex, low-IF transceiver. Here the received RF signal is first amplified by the LNA. The LNA inputs are single ended to minimise the external BoM and for ease of design. Following the LNA inputs, the conversion to differential is made to improve the second order linearity and harmonic rejection. The signal is then down-converted to in-phase and quadrature (I&Q) components at the intermediate frequency (IF) by the mixer stage. A pair of sigma delta ADCs then perform data conversion, with all subsequent signal processing and demodulation performed in the digital domain. The digital state machine also controls the automatic frequency correction (AFC), received signal strength indicator (RSSI) and automatic gain control (AGC). It also features the higher-level packet and protocol level functionality of the top level sequencer (TLS).

The frequency synthesisers generate the local oscillator (LO) frequency for both receiver and transmitter, one covering the lower UHF bands (up to 525 MHz), and the other one covering the upper UHF bands (from 860 MHz). The PLLs are optimized for user-transparent low lock time and fast auto-calibrating operation. In transmission, frequency modulation is performed digitally within the PLL bandwidth. The PLL also features optional pre-filtering of the bit stream to improve spectral purity.

SX1276/77/78 feature three distinct RF power amplifiers. Two of those, connected to RFO_LF and RFO_HF, can deliver up to +14 dBm, are unregulated for high power efficiency and can be connected directly to their respective RF receiver inputs via a pair of passive components to form a single antenna port high efficiency transceiver. The third PA, connected to the PA_BOOST pin and can deliver up to +20 dBm via a dedicated matching network. Unlike the high efficiency PAs, this high-stability PA covers all frequency bands that the frequency synthesizer addresses.

SX1276/77/78 also include two timing references, an RC oscillator and a 32 MHz crystal oscillator.

©2013 Semtech Corporation

All major parameters of the RF front end and digital state machine are fully configurable via an SPI interface which gives access to SX1276/77/78's configuration registers. This includes a mode auto sequencer that oversees the transition and calibration of the SX1276/77/78 between intermediate modes of operation in the fastest time possible.

The SX1276/77/78 are equipped with both standard FSK and long range spread spectrum (LoRa™) modems. Depending upon the mode selected either conventional OOK or FSK modulation may be employed or the LoRa™ spread spectrum modem.

3.1. LoRa™ Modem

The LoRa™ modem uses a proprietary spread spectrum modulation technique. This modulation, in contrast to legacy modulation techniques, permits an increase in link budget and increased immunity to in-band interference. At the same time the frequency tolerance requirement of the crystal reference oscillator is relaxed - allowing a performance increase for a reduction in system cost. For a fuller description of the design trade-offs and operation of the SX1276/77/78 please consult Section 4.1 of the datasheet.

3.2. FSK/OOK Modem

In FSK/OOK mode the SX1276/77/78 supports standard modulation techniques including OOK, FSK, GFSK, MSK and GMSK. The SX1276/77/78 is especially suited to narrow band communication thanks the low-IF architecture employed and the built-in AFC functionality. For full information on the FSK/OOK modem please consult Section 4.2 of this document.

©2013 Semtech Corporation

4. SX1276/77/78 Digital Electronics

4.1. The LoRa™ Modem

The LoRa™ modem uses spread spectrum modulation and forward error correction techniques to increase the range and robustness of radio communication links compared to traditional FSK or OOK based modulation. Examples of the performance improvement possible, for several possible settings, are summarised in the table below. Here the spreading factor and error correction rate are design variables that allow the designer to optimise the trade-off between occupied bandwidth, data rate, link budget improvement and immunity to interference.

Table 58 Example LoRa™ Modem Performances

Bandwidth (kHz)	Spreading Factor	Coding rate	Nominal Rb (bps)	Sensitivity indication (dBm)	Frequency Reference
10.4	6	4/5	782	TBC	TCXO
	12	4/5	24	TBC	
20.8	6	4/5	1562	TBC	
	12	4/5	49	TBC	
62.5	6	4/5	4688	-121	XTAL
	12	4/5	146	-139	
125	6	4/5	9380	-118	
	12	4/5	293	-136	

For European operation the range of crystal tolerances acceptable for each sub-band (of the ERC 70-03) is given in the specifications table. For US based operation a frequency hopping mode is available that automates both the LoRa™ spread spectrum and frequency hopping spread spectrum processes.

Another important facet of the LoRa™ modem is its increased immunity to interference. The LoRa™ modem is capable of co-channel GMSK rejection of up to 25 dB. This immunity to interference permits the simple coexistence of LoRa™ modulated systems either in bands of heavy spectral usage or in hybrid communication networks that use LoRa™ to extend range when legacy modulation schemes fail.

©2013 Semtech Corporation

4.1.1. Link Design Using the LoRa™ Modem

4.1.1.1. Overview

The LoRa™ modem is setup as shown in the following figure. This configuration permits the simple replacement of the FSK modem with the LoRa™ modem via the configuration register setting *RegOpMode*. This change can be performed on the fly (in Sleep operating mode) thus permitting the use of both standard FSK or OOK in conjunction with the long range capability. The LoRa™ modulation and demodulation process is proprietary, it uses a form of spread spectrum modulation combined with cyclic error correction coding. The combined influence of these two factors is an increase in link budget and enhanced immunity to interference.

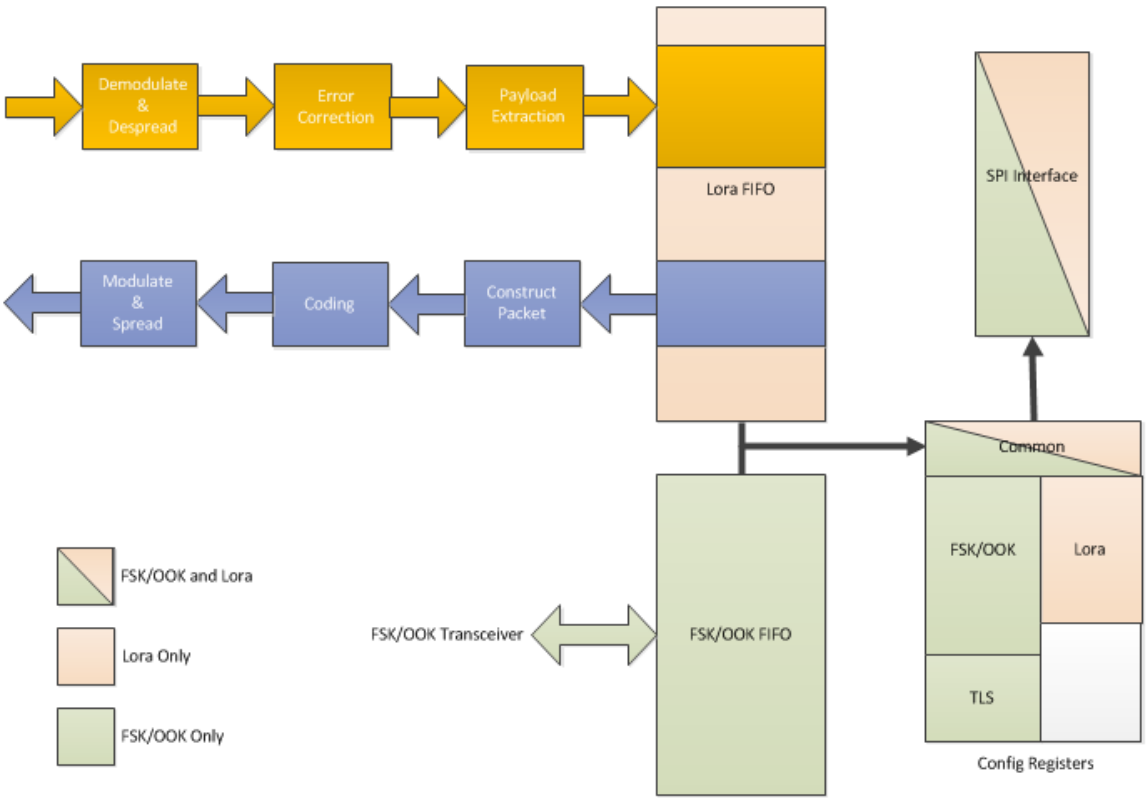

Figure 4. LoRa™ Modem Connectivity

A simplified outline of the transmit and receive processes is also shown above. Here we see that the LoRa™ modem has an independent dual port data buffer FIFO that is accessed through an SPI interface common to all modes. Upon selection of LoRa™ mode, the configuration register mapping of the SX1276/77/78 changes. For full details of this change please consult the register description of Section 6.

So that it is possible to optimise the LoRa™ modulation for a given application, access is given to the designer to three critical design parameters. Each one permitting a trade off between link budget, immunity to interference, spectral occupancy and nominal data rate. These parameters are spreading factor, modulation bandwidth and error coding rate.

©2013 Semtech Corporation

4.1.1.2. Spreading Factor

The spread spectrum LoRa™ modulation is performed by representing each bit of payload information by multiple chips of information. The rate at which the spread information is sent is referred to as the symbol rate (Rs), the ratio between the nominal symbol rate and chip rate is the spreading factor and represents the number of symbols sent per bit of information. The range of values accessible with the LoRa™ modem are shown in the following table.

Table 59 Range of Spreading Factors

SpreadingFactor (RegModulationCfg)	Spreading Factor (Chips / symbol)	LoRa Demodulator SNR
6	64	-5 dB
7	128	-7.5 dB
8	256	-10 dB
9	512	-12.5 dB
10	1024	-15 dB
11	2048	-17.5 dB
12	4096	-20 dB

Note that the spreading factor, *SpreadingFactor*, must be known in advance on both transmit and receive sides of the link as different spreading factors are orthogonal to each other. Note also the resulting signal to noise ratio (SNR) required at the receiver input. It is the capability to receive signals with negative SNR that increases the sensitivity, so link budget and range, of the LoRa receiver.

Spreading Factor 6

SF = 6 Is a special use case for the highest data rate transmission possible with the LoRa modem. To this end several settings must be activated in the SX1276/77/78 registers when it is in use:

- Set *SpreadingFactor* = 6 in *RegModemConfig2*
- The header must be set to Implicit mode
- Write bits 2-0 of register address 0x31 to value "0b101"
- Write register address 0x37 to value 0x0C

4.1.1.3. Coding Rate

To further improve the robustness of the link the LoRa™ modem employs cyclic error coding to perform forward error detection and correction. Such error coding incurs a transmission overhead - the resultant additional data overhead per transmission is shown in the table below.

Table 60 Cyclic Coding Overhead

CodingRate (RegTxCfg1)	Cyclic Coding Rate	Overhead Ratio
1	4/5	1.25
2	4/6	1.5
3	4/7	1.75
4	4/8	2

©2013 Semtech Corporation

Forward error correction is particularly efficient in improving the reliability of the link in the presence of interference. So that the coding rate (and so robustness to interference) can be changed in response to channel conditions - the coding rate can optionally be included in the packet header for use by the receiver. Please consult Section 4.1.1.6 for more information on the LoRa™ packet and header.

4.1.1.4. Signal Bandwidth

An increase in signal bandwidth permits the use of a higher effective data rate, thus reducing transmission time at the expense of reduced sensitivity improvement. There are of course regulatory constraints in most countries on the permissible occupied bandwidth. Contrary to the FSK modem which is described in terms of the single sideband bandwidth, the LoRa™ modem bandwidth refers to the double sideband bandwidth (or total channel bandwidth). The range of bandwidths relevant to most regulatory situations is given in the LoRa™ modem specifications table (see Section 2.4.5).

Bandwidth (kHz)	Spreading Factor	Coding rate	Nominal Rb (bps)
7.8	12	4/5	18
10.4	12	4/5	24
15.6	12	4/5	37
20.8	12	4/5	49
31.2	12	4/5	73
41.7	12	4/5	98
62.5	12	4/5	146
125	12	4/5	293
250	12	4/5	586
500	12	4/5	1172

Note In the lower band (169 MHz), the 250 kHz and 500 kHz bandwidths are not supported.

4.1.1.5. LoRa™ Transmission Parameter Relationship

With a knowledge of the key parameters that can be controlled by the user we define the LoRa™ symbol rate as:

$$Rs = \frac{BW}{2^{SF}}$$

where BW is the programmed bandwidth and SF is the spreading factor. The transmitted signal is a constant envelope signal. Equivalently, one chip is sent per second per Hz of bandwidth.

©2013 Semtech Corporation

4.1.1.6. *LoRa™ Packet Structure*

The LoRa™ modem employs two types of packet format, explicit and implicit. The explicit packet includes a short header that contains information about the number of bytes, coding rate and whether a CRC is used in the packet. The packet format is shown in the following figure.

The LoRa™ packet comprises three elements:

- A preamble.
- An optional header.
- The data payload.

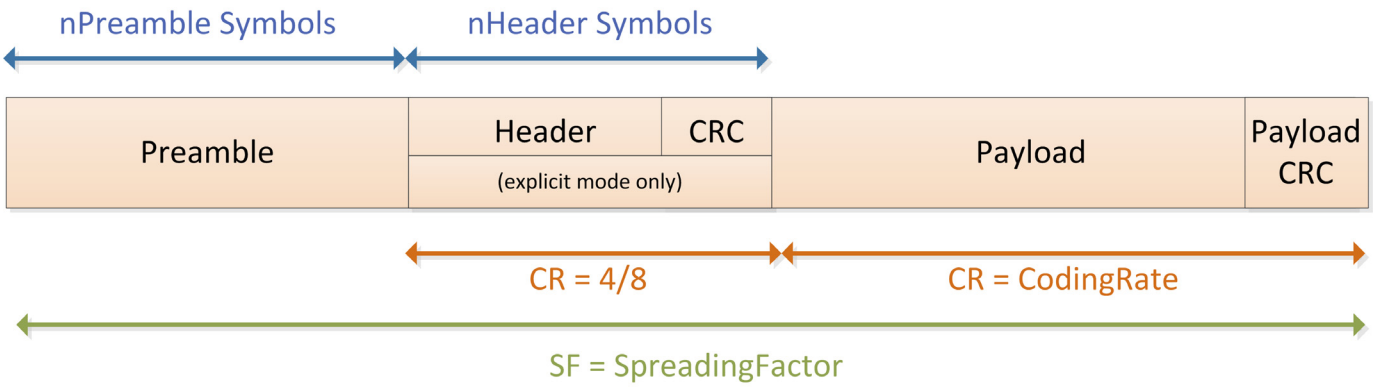

Figure 5. LoRa™ *Packet Structure*

Preamble

The preamble is used to synchronize receiver with the incoming data flow. By default the packet is configured with a 12 symbol long sequence. This is a programmable variable so the preamble length may be extended, for example in the interest of reducing to receiver duty cycle in receive intensive applications. However, the minimum length suffices for all communication. The transmitted preamble length may be changed by setting the register *PreambleLength* from 6 to 65535, yielding total preamble lengths of 6+4 to 65535+4 symbols, once the fixed overhead of the preamble data is considered. This permits the transmission of a near arbitrarily long preamble sequence.

The receiver undertakes a preamble detection process that periodically restarts. For this reason the preamble length should be configured identical to the transmitter preamble length. Where the preamble length is not known, or can vary, the maximum preamble length should be programmed on the receiver side.

Header

Depending upon the chosen mode of operation two types of header are available. The header type is selected by the *ImplictHeaderMode* bit found within the *RegSymbTimeoutMsb* register.

Explicit Header Mode

This is the default mode of operation. Here the header provides information on the payload, namely:

- The payload length in bytes.
- The forward error correction code rate
- The presence of an optional 16-bits CRC for the payload.

©2013 Semtech Corporation

The header is transmitted with maximum error correction code (4/8). It also has its own CRC to allow the receiver to discard invalid headers.

Implicit Header Mode

In certain scenarios, where the payload, coding rate and CRC presence are fixed or known in advance, it may be advantageous to reduce transmission time by invoking implicit header mode. In this mode the header is removed from the packet. In this case the payload length, error coding rate and presence of the payload CRC must be manually configured on both sides of the radio link.

Note With SF = 6 selected, implicit header mode is the only mode of operation possible.

Payload

The packet payload is a variable-length field that contains the actual data coded at the error rate either as specified in the header in explicit mode or in the register settings in implicit mode. An optional CRC may be appended. For more information on the payload and how it is loaded from the data buffer FIFO please see Section 4.1.2.3.

4.1.1.7. Time on air

For a given combination of spreading factor (SF), coding rate (CR) and signal bandwidth (BW) the total on-the-air transmission time of a LoRa™ packet can be calculated as follows. From the definition of the symbol rate it is convenient to define the symbol rate:

$$Ts = \frac{1}{Rs}$$

The LoRa packet duration is the sum of the duration of the preamble and the transmitted packet. The preamble length is calculated as follows:

$$T_{preamble} = (n_{preamble} + 4.25)T_{sym}$$

where $n_{preamble}$ is the programmed preamble length, *PreambleLength*.The payload duration depends upon the header mode that is enabled. The following formulae give the payload duration in implicit (headerless) and explicit (with header) modes.

$$T_{payload} = \begin{cases} T_{sym}\left[8 + ceil\left(\frac{8l_{payload} - 4SF + 24}{4SF}\right)\right](CR+4) & \text{where: } l_{payload} > 0, \text{ implicit header} \\ T_{sym}\left[8 + ceil\left(\frac{8l_{payload} - 4SF + 44}{4SF}\right)\right](CR+4) & \text{where: } l_{payload} > 0, \text{ explicit header} \end{cases}$$

Addition of these two durations gives the total packet on -air time.

$$T_{packet} = T_{preamble} + T_{payload}$$

4.1.1.8. Frequency Hopping with LoRa™

Frequency hopping spread spectrum (FHSS) is typically employed when the duration of a single packet could exceed regulatory requirements relating to the maximum permittable channel dwell time. This is most notably the case in US operation where the 902 to 928 MHz ISM band can be used ina frequency hopping mode. To ease implementation of FHSS systems the frequency hopping mode of the LoRa™ modem can be enabled (see *FhssMode* of register *RegTxCfg1*).

©2013 Semtech Corporation

Principle of Operation

The principle behind the FHSS scheme is that a portion of each LoRa™ packet is transmitted on each hopping channel from a look up table of frequencies managed by the host microcontroller. After a predetermined hopping period the transmitter and receiver change to the next channel in a predefined list of hopping frequencies to continue transmission and reception of the next portion of the packet. The time which the transmission will dwell in any given channel is determined by *HoppingPeriod* which is an integer multiple of symbol periods:

$$HoppingPeriod = Ts \times FreqHoppingPeriod$$

The frequency hopping transmission and reception process starts at channel 0. The preamble and header are transmitted first on channel 0. At the beginning of each transmission the interrupt the channel counter *FhssPresentChannel* is incremented and the interrupt signal *FhssChangeChannel* is generated. The new frequency must then be programmed within the hopping period to ensure it is taken into account for the next hop, the interrupt *FhssChangeChannel* is then to be cleared by writing a logical '1'.

FHSS Reception always starts on channel 0. The receiver waits for a valid preamble detection before starting the frequency hopping process as described above. Note that in the eventuality of header CRC corruption, the receiver will automatically request channel 0 and recommence the valid preamble detection process.

Timing of Channel Updates

The interrupt requesting the channel change, *FhssChannelChange,* is generated upon transition to the new frequency. The frequency hopping process is recapitulated in the diagram below:

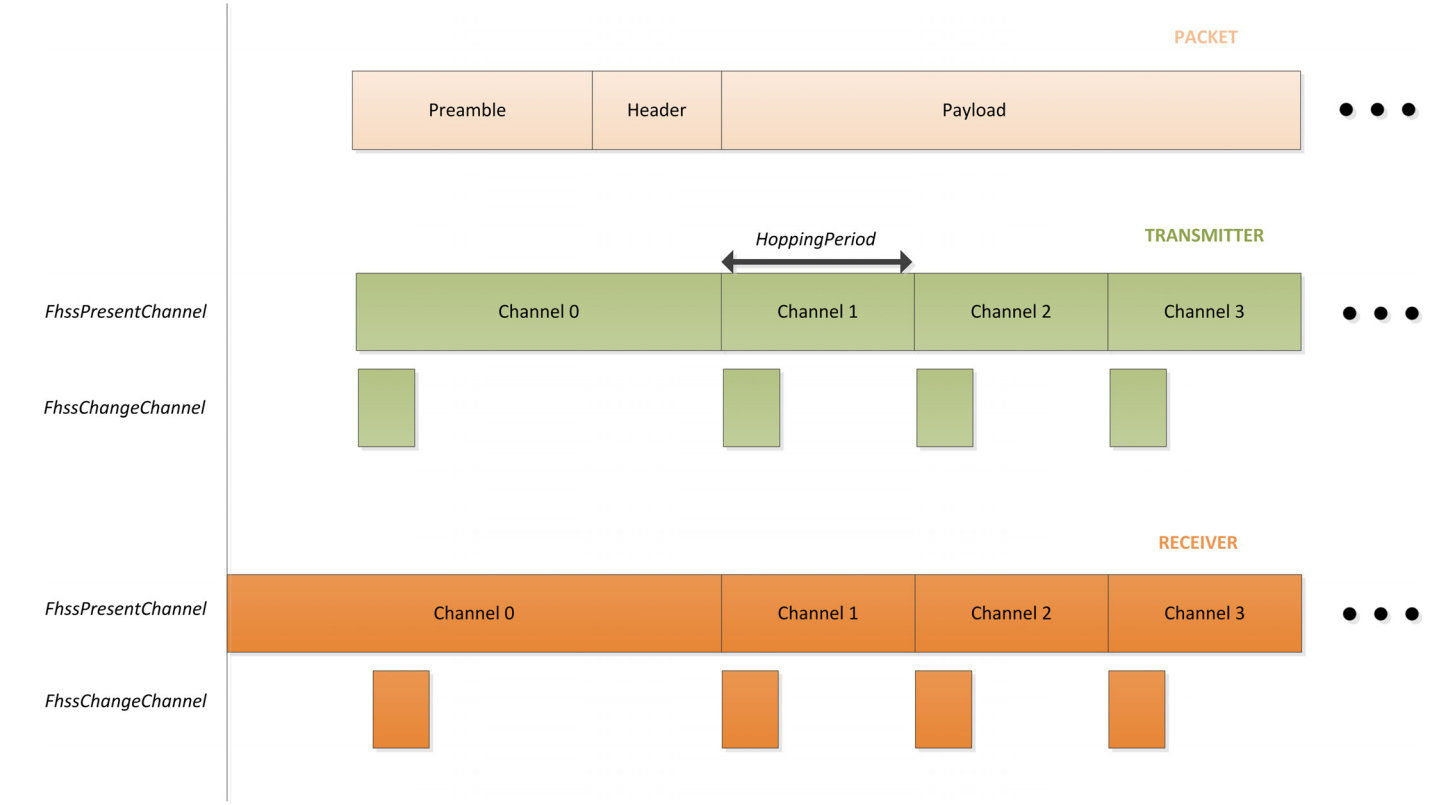

Figure 6. Interrupts generated in the case of successful frequency hopping communication.

©2013 Semtech Corporation

4.1.2. LoRa™ Digital Interface

The LoRa™ modem comprises three types of digital interface, static configuration registers, status registers and a FIFO data buffer. All are accessed through the SX1276/77/78's SPI interface - full details of each type of register are given below. Full listings of the register addresses used for SPI access are given in Section 6.4.

4.1.2.1. LoRa™ Configuration Registers

Configuration registers are accessed through the SPI interface. Registers are readable in all device mode including Sleep. However, they should be **written only in Sleep and Stand-by modes**. Please note that **the automatic top level sequencer (TLS modes) are not available in** LoRa™ **mode** and **the configuration register mapping changes as shown in Table** 85**.** The content of the LoRa™ configuration registers is retained in FSK/OOK mode. For the functionality of mode registers common to both FSK/OOK and LoRa™ mode, please consult the Analog and RF Front End section of this document (Section 5).

4.1.2.2. Status Registers

Status registers provide status information during receiver operation.

4.1.2.3. LoRa™ Mode FIFO Data Buffer

Overview

The SX1276/77/78 is equipped with a 256 byte RAM data buffer which is uniquely accessible in LoRa mode. This RAM area, thereafter reffered to as the FIFO Data buffer, is fully customizable by the user and allows access to the received, or to be transmitted, data. All access to the LoRa™ FIFO data buffer is done via the SPI interface. A diagram of the user defined memory mapping of the FIFO data buffer is shown below. These FIFO data buffer can be read in all operating modes except sleep and store data related to the last receive operation performed. It is automatically cleared of old content upon each new transition to receive mode.

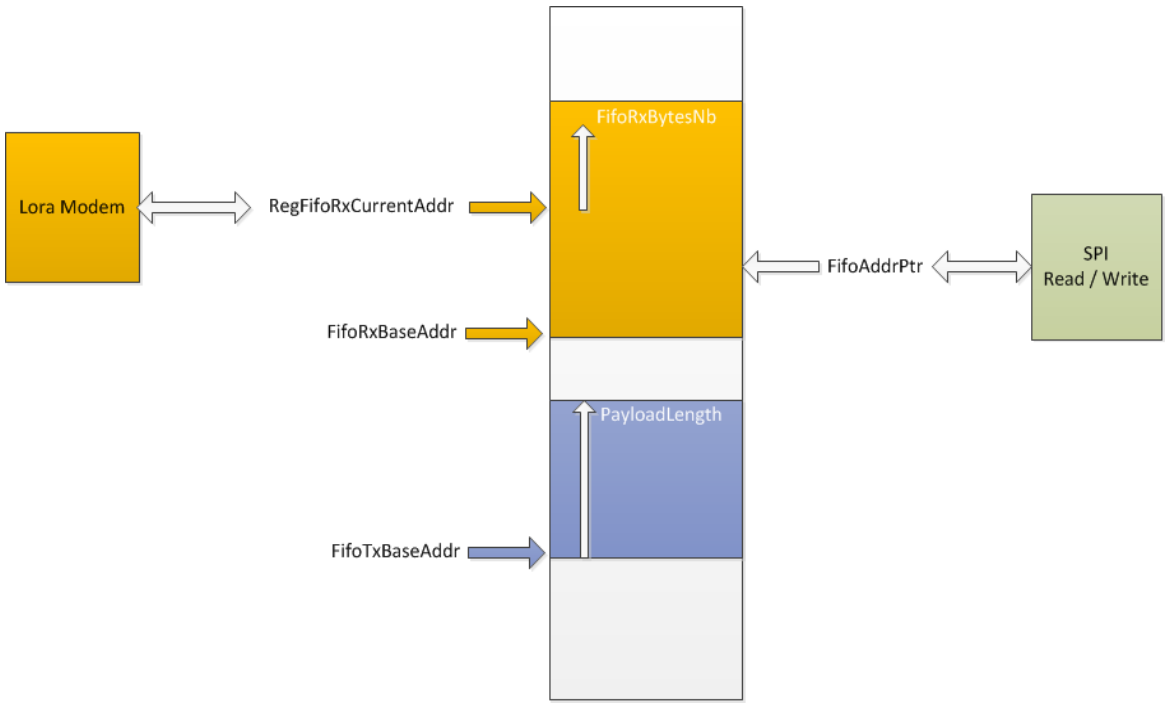

Figure 7. LoRa™ *data buffer*

©2013 Semtech Corporation

Principle of Operation

Thanks to its dual port configuration, it is possible to simultaneously store both transmit and receive information in the FIFO data buffer. The register *FifoTxBaseAddr* specifies the point in memory where the transmit information is stored. Similarly, for receiver operation, the register *FifoRxBaseAddr* indicates the point in the data buffer where information will be written to in event of a receive operation.

By default, the device is configured at power-up so that half of the available memory is dedicated to Rx (*FifoRxBaseAddr* initialized at address 0x00) and the other half is dedicated for Tx (*FifoTxBaseAddr* initialized at address 0x80).

However, due to the contiguous nature of the FIFO data buffer, the base addresses for Tx and Rx are fully configurable across the 256 byte memory area. Each pointer can be set independently anywhere within the FIFO. To exploit the maximum FIFO data buffer size in transmit or receive mode, the whole FIFO data buffer can be used in each mode by setting the base addresses *FifoTxBaseAddr* and *FifoRxBaseAddr* at the bottom of the memory (0x00).

The FIFO data buffer is cleared when the device is put in SLEEP mode, consequently no access to the FIFO data buffer is possible in sleep mode. However, the data in the FIFO data buffer are retained when switching across the other LoRa modes of operation, so that a received packet can be retransmitted with minimum data handling on the controller side. The FIFO data buffer is not self-clearing (unless if the device is put in sleep mode) and the data will only be “erased” when a new set of data is written into the occupied memory location.

The actual location to be read from, or written to, over the SPI interface is defined by the address pointer *FifoAddrPtr*. Before any read or write operation it is hence necessary to initialise this pointer to the corresponding base value. Upon reading or writing to the FIFO data buffer (*RegFifo*) the address pointer will then increment automatically.

The register *FifoRxBytesNb* defines the size of the memory location to be written in the event of a successful receive operation. On the other hand *PayloadLength* indicates the size of the memory location to be transmitted. In implicit header mode, the *FifoRxBytesNb* is not used as the number of payload bytes is known. Otherwise, in explicit header mode, the initial size of the receive buffer is set to the packet length in the received header. The variable *FifoRxCurrentAddr* indicates the location of the last packet received in the FIFO so that the last packet received can be easily read by pointing the *FifoAddrPtr* to this register.

It is important to notice that all the received data will be written to the FIFO data buffer even if the CRC is invalid. This allows for post-processing of received data for debug purposes for instance. It is also imporant to note that when receiving, if the packet size exceeds the buffer memory allocated for the Rx it will overwrite the transmit portion of the data buffer.

©2013 Semtech Corporation

4.1.3. Operation of the LoRa™ Modem

4.1.3.1. Operating Mode Control

The operating modes of the LoRa™ modem are accessed by enabling LoRa™ mode (setting the *LongRangeMode* bit of *RegOpMode*). Depending upon the operating mode selected the range of functionality and register access is given by the following table:

Table 61 LoRa™ Operating Mode Functionality

Operating Mode	Description
SLEEP	Low-power mode. In this mode only SPI and configuration registers are accessible. Lora FIFO is not accessible. Note that this is the only mode permissible to switch between FSK/OOK mode and LoRa mode.
STAND-BY	both Crystal oscillator and Lora baseband blocks are turned on.RF part and PLLs are disabled
FSTX	This is a frequency synthesis mode for transmission. The PLL selected for transmission is locked and active at the transmit frequency. The RF part is off.
FSRX	This is a frequency synthesis mode for reception. The PLL selected for reception is locked and active at the receive frequency. The RF part is off.
TX	When activated the SX1276/77/78 powers all remaining blocks required for transmit, ramps the PA, transmits the packet and returns to Stand-by mode.
RXCONTINUOUS	When activated the SX1276/77/78 powers all remaining blocks required for reception, processing all received data until a new user request is made to change operating mode.
RXSINGLE	When activated the SX1276/77/78 powers all remaining blocks required for reception, remains in this state until a valid packet has been received and then returns to Stand-by mode.
CAD	When in CAD mode, the device will check a given channel to detect LoRa preamble signal

It is possible to access any mode from any other mode by changing the value in the *RegOpMode* register.

©2013 Semtech Corporation

4.1.4. Frequency Settings

Recalling that the frequency step is given by:

$$F_{STEP} = \frac{F_{XOSC}}{2^{19}}$$

In order to set LO frequency values following registers are available.

Frf is a 24-bit register which defines carrier frequency. The carrier frequency relates to the register contents by following formula:

$$F_{RF} = F_{STEP} \times Frf(23,0)$$

©2013 Semtech Corporation

4.1.5. LoRa™ Modem State Machine Sequences

The sequence for transmission and reception of data to and from the LoRa™ modem, together with flow charts of typical sequences of operation, are detailed below.

Data Transmission Sequence

In transmit mode power consumption is optimized by enabling RF, PLL and PA blocks only when packet data needs to be transmitted. Figure 8 shows a typical LoRa™ transmit sequence.

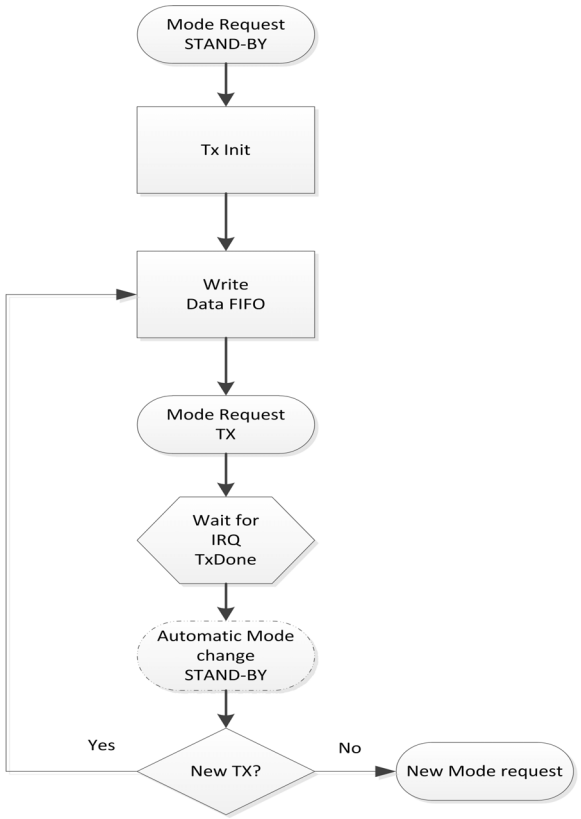

Figure 8. LoRa™ *modulation transmission sequence.*

- Static configuration registers can only be accessed in Sleep mode, Stand-by mode or FSTX mode.
- The LoRa™ FIFO can only be filled in Stand-by mode.
- Data transmission is initiated by sending TX mode request.
- Upon completion the *TxDone* interrupt is issued and the radio returns to Stand-by mode.
- Following transmission the radio can be manually placed in Sleep mode or the FIFO refilled for a subsequent Tx operation.

©2013 Semtech Corporation

LoRa™ Transmit Data FIFO Filling

In order to write packet data into FIFO user should:

1 Set *FifoPtrAddr* to *FifoTxPtrBase*.

2 Write *PayloadLength* bytes to the FIFO (*RegFifo*)

Data Reception Sequence

Figure 9 shows typical LoRa™ receive sequences for both single and continuous receiver modes of operation.

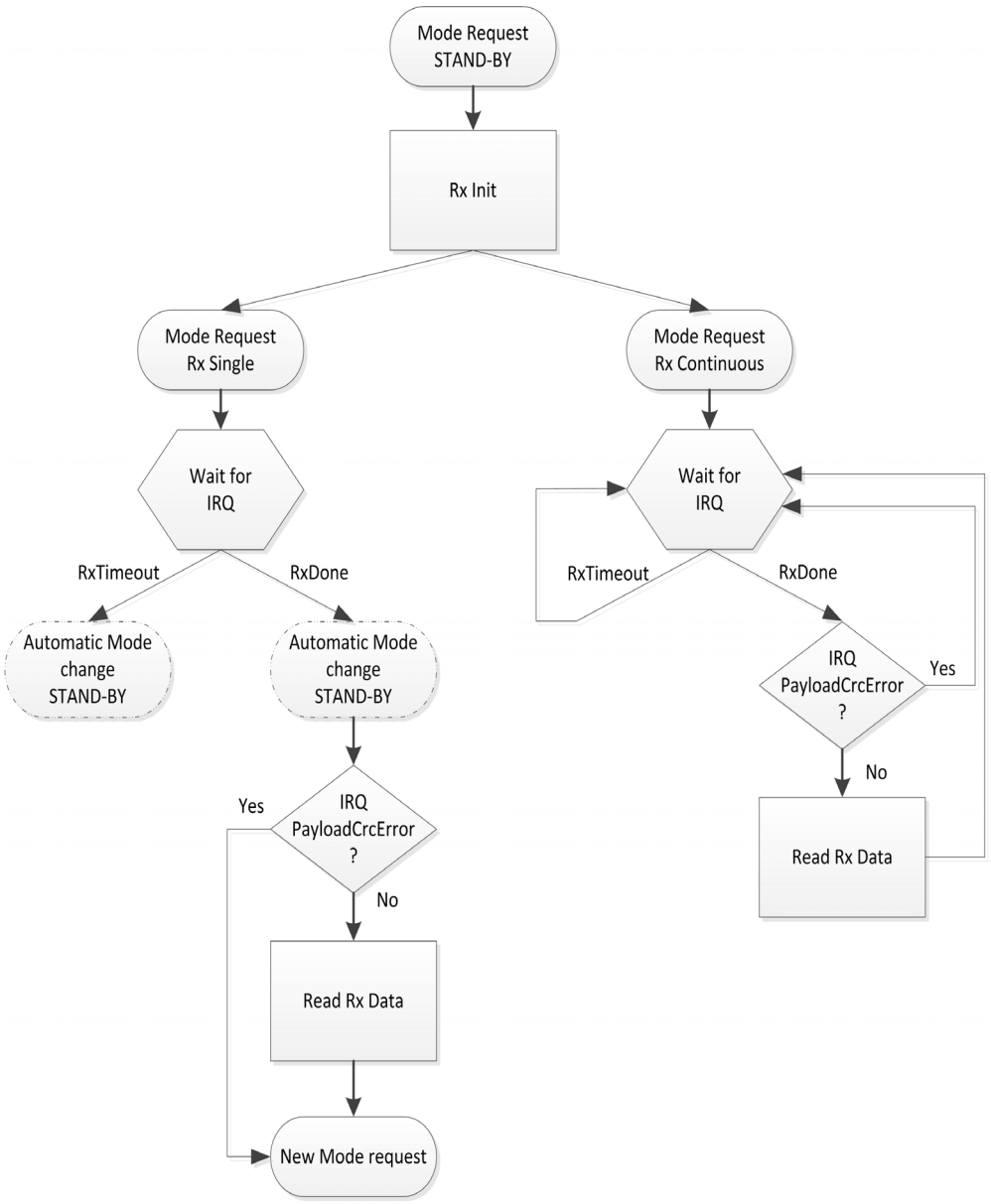

Figure 9. LoRa™ receive sequence.

©2013 Semtech Corporation

The LORA receive modem can work in two distinct mode

1. Single receive mode
2. Continuous receive mode

Those two modes correspond to different use cases and it is important to understand the subtle differences between them.

Single Reception Operating Mode

In this mode, the modem searches for a preamble during a given time window. If a preamble hasn't been found at the end of the time window, the chip generates the RxTimeout interrupt and goes back to stand-by mode . The length of the window (in symbols) is defined by the RegSymbTimeout register and should be in the range of 4 (minimum time for the modem to acquire lock on a preamble) up to 1023 symbols. (The default value being 5). If no preamble is detected during this window the RxTimeout interrupt is generated and the radio goes back to stand-by mode.

At the end of the payload, the RxDone interrupt is generated together with the interrupt PayloadCrcError if the payload CRC is not valid. However, even when the CRC is not valid, the data are written in the FIFO data buffer for post processing. Following the RxDone interrupt the radio goes to stand-by mode.

The modem will also automatically return in stand-by mode when the interrupts RxDone or RxTimeout are generated. Therefore, this mode should only be used when the time window of arrival of the packet is known . In other cases, the RX continuous mode should be used.

In Rx single mode low-power is achieved by turning off PLL and RF blocks as soon as a packet has been received. The flow is as follows:

1 *Set FifoPtrAddr* to *FifoRxPtrBase*.

2 Static configuration register device can be written in either Sleep mode, Stand-by mode or FSRX mode.

3 A single packet receive operation is initiated by selecting the operating mode RXSINGLE.

4 The receiver will then await the reception of a valid preamble. Once received, the gain of the receive chain is set. Following the ensuing reception of a valid header, indicated by the ValidHeader interrupt in explicit mode. The packet reception process commences. Once the reception process is complete the RxDone interrupt is set. The radio then returns automatically to Stand-by mode to reduce power consumption.

5 The receiver status register PayloadCrcError should be checked for packet payload integrity.

6 If a valid packet payload has been received then the FIFO should be read (See Payload Data Extraction below). Should a subsequent single packet reception need to be triggered, then the RXSINGLE operating mode must be re-selected to launch the receive process again - taking care to reset the SPI pointer (FifoPtrAddr) to the base location in memory (FifoRxPtrBase).

Continuous Reception Operating Mode

In continuous receive mode the modem scans the channel continuously for a preamble. Each time a preamble is detected the modem detects and tracks it until the packet is received and then carries on waiting for the next preamble.

If the preamble length exceeds the anticipated value set by the registers RegPreambleMsb and RegPreambleLsb (measured in symbol unit), the preamble will be dropped and the search for a preamble restarted. However, this scenario will not be flagged by an interrupt. In continous RX mode, opposite to the single RX mode, when a timeout interrupt is generated, the device will not go in standby mode. In this case, the user must simply clear the interrupt while the device carry on waiting for a valid preamble.

©2013 Semtech Corporation

It is also important to note that the demodulated bytes are written in the data buffer memory in the order received. Meaning, the first byte of a new packet is written just after the last byte of the preceding packet. The RX modem address pointer is never reseted as long as this mode is enabled. It is therefore necessary for the controller to handle the address pointer to make sure the FIFO data buffer is never full.

In continuous mode the received packet processing sequence is given below.

1 Whilst in Sleep or Stand-by mode select RXCONT mode.
2 Upon reception of a valid header CRC the *RxDone i*nterrupt is set. The radio remains in RXCONT mode waiting for the next RX LoRa™ packet.
3 The *PayloadCrcError* flag should be checked for packet integrity.
4 If packet has been correctly received the FIFO data buffer can be read (see below).
5 The reception process (steps 2 - 4) can be repeated or receiver operating mode exited as desired.

In continuous mode status information are available only for the last packet received, i.e. the corresponding registers should be read before the next RxDone arrives.

Payload Data Extraction from FIFO

In order to retrieve received data from FIFO the user must ensure that *ValidHeader*, *PayloadCrcError, RxDone* and *RxTimeout* interrupts in the status register RegIrqFlags are not asserted to ensure that packet reception has terminated successfully (i.e. no flags should be set).

In case of errors the steps below should be skipped and the packet discarded. In order to retrieve valid received data from the FIFO the user must:

- *FifoNbRxBytes* Indicates the number of bytes that have been received thus far.
- *RegRxDataAddr* Is a dynamic pointer that indicates precisely where the Lora modem received data has been written up to.
- Set *FifoPtrAddr* to *FifoRxCurrentAddr*. This sets the FIFO pointer to the the location of the last packet received in the FIFO. The payload can then be extracted by reading the *RegFifo* address *RegNbRxBytes* times. Alternatively, it is possible to manually point to the location of the last packet received from the start of the current packet by setting *FifoPtrAddr* to *RegRxDataAddr* - *FifoNbRxBytes*. In the same way, packet bytes can then be extracted from FIFO by reading the *RegFifo* address *RegNbRxBytes* times.

Packet Filtering based on Preamble Start

The LoRa modem does automatically filter received packets based upon any addressing. However the SX1276/77/78 permit software filtering of the received packets based on the contents of the first few bytes of payload. A brief example is given below for a 4 byte address, however, the address length can be selected by the designer.

The objective of the packet filtering process is to determine the presence, or otherwise, of a valid packet designed for the receiver. If the packet is not for the receiver then the radio returns to sleep mode in order to improve battery life.

The software packet filtering process follows the steps below:

©2013 Semtech Corporation

- Each time the RxDone interrupt is received, latch the RegFifoRxByteAddr[7:0] register content in a variable , this variable will be called start_address. The RegFifoRxByteAddr[7:0] register of the SX1276/77/78 gives in real time the address of the last byte written in the data buffer + 1 (or the address at which the next byte will be written) by the receive LoRa modem . So by doing this , we make sure that the variable start_address always contains the start address of the next packet.

- Upon reception of the interrupt ValidHeader, start polling the RegFifoRxByteAddr[7:0] register until it begins to increment. The speed at which this register will increment depends on the Spreading factor, the error correction code and the modulation bandwidth. (Note that this interrupt is still generated in implicit mode).

- As soon as RegFifoRxByteAddr[7:0] >= start address + 4, the first 4 bytes (address) are stored in the FIFO data buffer. These can be read and tested to see if the packet is destined for the radio and either remaining in Rx mode to receive the packet or returning to sleep mode if not.

Receiver Timeout Operation

In either single or continuous LoRa™ reception modes, a receiver timeout functionality is available that permits the receiver to listen for a pre-determined period of time before generating an interrupt signal to indicate that no valid packets have been received. The timer is absolute and commences as soon as the radio is placed in either single or continuous receive mode. The interrupt itself, *RxTimeout*, can be found in the interrupt register *RegIrqFlags*. In Rx Single mode, the device will return in Stanby mode as soon as the interrupt occurs and the interrupt needs to be cleared before to return in Rx Single mode. In Rx Continuous mode, the interrupt will interrupt will simply be raised but the device will stay in Rx Continous mode. It is therefore the responsability on the controller to clear the interrupt while still in Rx Continuous mode. The programmed timeout value is expressed as a multiple of the symbol period and is given by:

$$TimeOut = LoraRxTimeout \cdot Ts$$

©2013 Semtech Corporation

Channel Activity Detection

The use of a spread spectrum modulation technique presents challenges in determining whether the channel is already in use by a signal that may be below the noise floor of the receiver. The use of the RSSI in this situation would clearly be impracticable. To this end the channel activity detector is used to detect the presence of other LoRa™ signals. Figure 10 shows the channel activity detection (CAD) process:

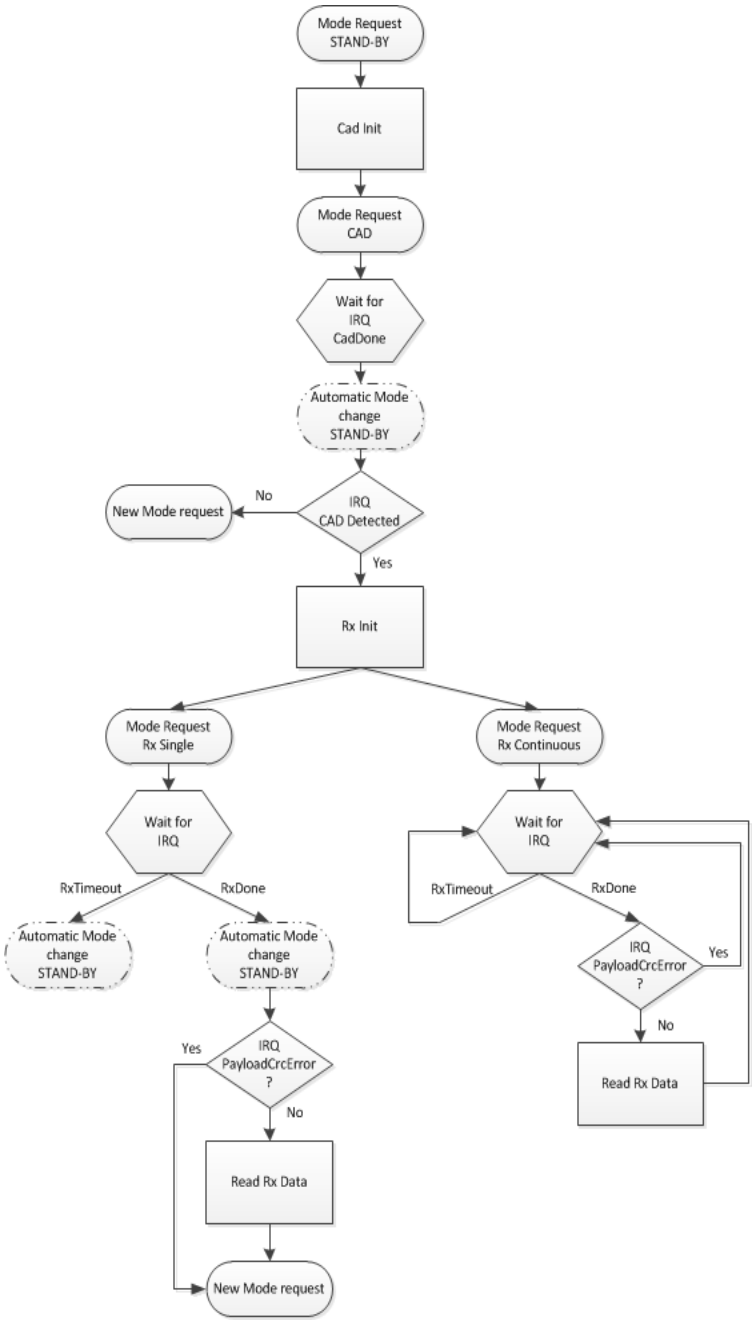

Figure 10. LoRa™ *CAD flow*

©2013 Semtech Corporation

Principle of Operation

The channel activity detection mode is designed to detect a LoRa preamble on the radio channel with the best possible power efficiency. Once in CAD mode, the SX1276/77/78 will perform a very quick scan of the band to detect a LoRa packet preamble.

During a CAD the following operations take place:

- The PLL locks
- The radio receiver captures LoRa preamble symbol of data from the channel. The radio current consumption during that phase corresponds to the specified Rx mode current
- The radio receiver and the PLL turn off, and the modem digital processing starts.
- The modem searches for a correlation between the radio captured samples and the ideal preamble waveform. This correlation process takes a little bit less than a symbol period to perform. The radio current consumption during that phase is greatly reduced.
- Once the calculation is finished the modem generates the CadDone interrupt. If the correlation was successful, CadDetected is generated simultaneously.
- The chip goes back to stand-by mode.
- If a preamble was detected, clear the interrupt, then initiate the reception by putting the radio in RX single mode or RX continuous mode.

The time taken for the channel activity detection is dependent upon the LoRa modulation settings used. For a given configuration the typical CAD detection time is shown in the graph below, expressed as a multiple of the LoRa symbol period. Of this period the radio is in receiver mode for (2^{SF} + 32) / BW seconds. For the remainder of the CAD cycle the radio is in a reduced consumption state.

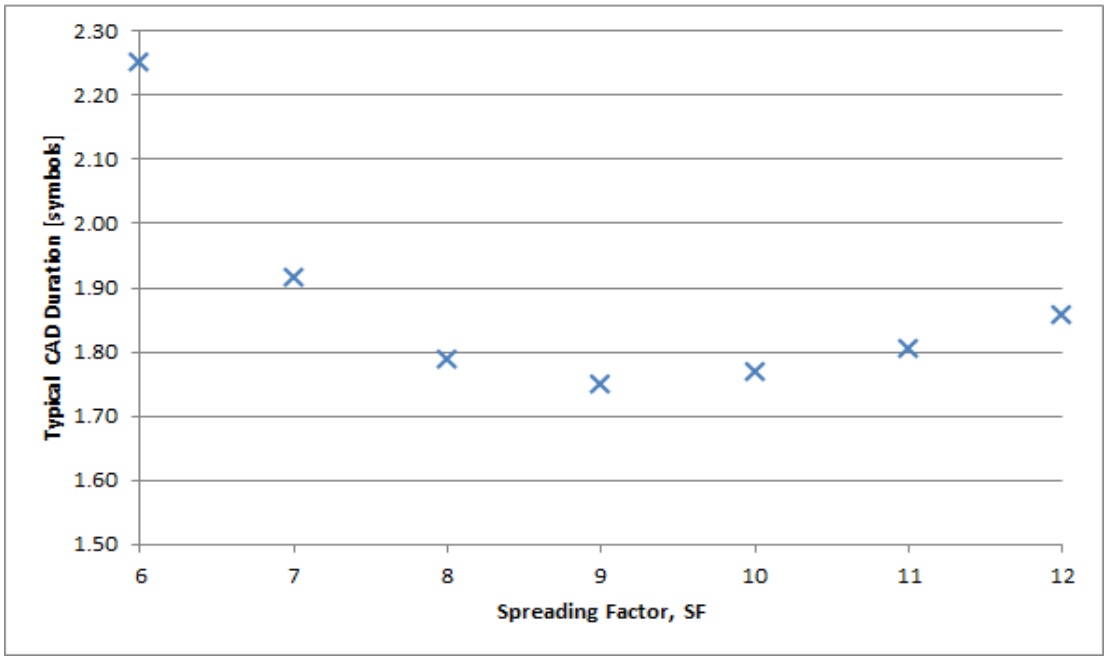

Figure 11. Channel activity detection (CAD) time as a function of spreading factor

©2013 Semtech Corporation

To illustrate this process and the respective consumption in each mode, the CAD process follows the sequence of events outlined below:

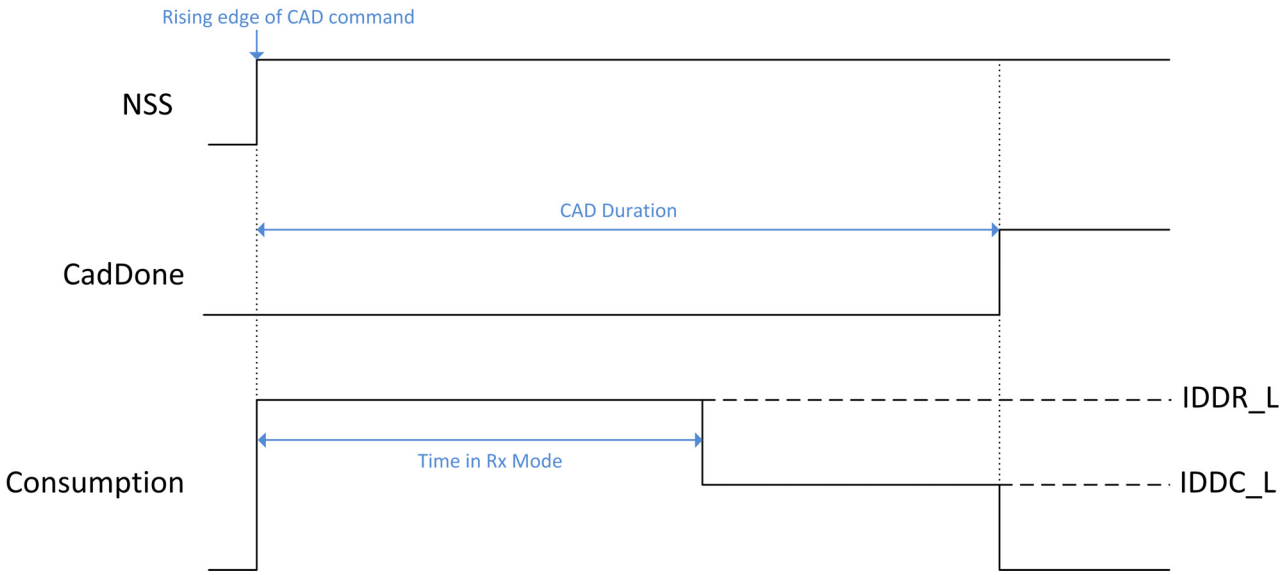

Figure 12. Consumption Profile of the LoRa CAD Process

The receiver is then in full receiver mode for just over half of the activity detection, followed by a reduced consumption processing phase where the consumption varies with the LoRa bandwidth as shown in the table below.

Table 62 LoRa CAD Consumption Figures

Bandwidth (kHz)	Full Rx, IDDR_L (mA)	Processing, IDDC_L (mA)
7.8	To be confirmed	
10.4		
15.6		
20.8		
31.2		
41.7		
62.5		
125	10.8	5.6
250	11.6	6.5
500	13	8

4.1.5.1. Digital IO Pin Mapping

Six of SX1276/77/78's general purpose IO pins are available used in LoRa™ mode. Their mapping is shown below and depends upon the configuration of registers *RegDioMapping1* and *RegDioMapping2.*

©2013 Semtech Corporation

Table 63 DIO Mapping LoRa™ *Mode*

Operating Mode	DIOx Mapping	DIO5	DIO4	DIO3	DIO2	DIO1	DIO0
ALL	00	ModeReady	CadDetected	CadDone	FhssChangeChannel	RxTimeout	RxDone
	01	ClkOut	PllLock	ValidHeader	FhssChangeChannel	FhssChangeChannel	TxDone
	10	ClkOut	PllLock	PayloadCrcError	FhssChangeChannel	CadDetected	CadDone
	11	-	-	-	-	-	-

4.2. FSK/OOK Modem

4.2.1. Bit Rate Setting

The bitrate setting is referenced to the crystal oscillator and provides a precise means of setting the bit rate (or equivalently chip) rate of the radio. In continuous transmit mode (Section 3.2.2) the data stream to be transmitted can be input directly to the modulator via pin 9 (DIO2/DATA) in an asynchronous manner, unless Gaussian filtering is used, in which case the DCLK signal on pin 10 (DIO1/DCLK) is used to synchronize the data stream. See section 4.2.2.3 for details on the Gaussian filter.

In Packet mode or in Continuous mode with Gaussian filtering enabled, the Bit Rate (BR) is controlled by bits *Bitrate* in *RegBitrateMsb and RegBitrateLsb*

$$BitRate = \frac{FXOSC}{BitRate(15,0) + \frac{BitrateFrac}{16}}$$

Note: BitrateFrac bits have ***no effect*** *(i.e may be considered equal to 0)* ***in OOK*** *modulation mode.*

The quantity *BitrateFrac* is hence designed to allow very high precision (max. 250 ppm programing resolution) for any bitrate in the programmable range. Table 64 below shows a range of standard bitrates and the accuracy to within which they may be reached.

©2013 Semtech Corporation

Table 64 Bit Rate Examples

Type	BitRate (15:8)	BitRate (7:0)	(G)FSK (G)MSK	OOK	Actual BR (b/s)
Classical modem baud rates (multiples of 1.2 kbps)	0x68	0x2B	1.2 kbps	1.2 kbps	1200.015
	0x34	0x15	2.4 kbps	2.4 kbps	2400.060
	0x1A	0x0B	4.8 kbps	4.8 kbps	4799.760
	0x0D	0x05	9.6 kbps	9.6 kbps	9600.960
	0x06	0x83	19.2 kbps	19.2 kbps	19196.16
	0x03	0x41	38.4 kbps		38415.36
	0x01	0xA1	76.8 kbps		76738.60
	0x00	0xD0	153.6 kbps		153846.1
Classical modem baud rates (multiples of 0.9 kbps)	0x02	0x2C	57.6 kbps		57553.95
	0x01	0x16	115.2 kbps		115107.9
Round bit rates (multiples of 12.5, 25 and 50 kbps)	0x0A	0x00	12.5 kbps	12.5 kbps	12500.00
	0x05	0x00	25 kbps	25 kbps	25000.00
	0x80	0x00	50 kbps		50000.00
	0x01	0x40	100 kbps		100000.0
	0x00	0xD5	150 kbps		150234.7
	0x00	0xA0	200 kbps		200000.0
	0x00	0x80	250 kbps		250000.0
	0x00	0x6B	300 kbps		299065.4
Watch Xtal frequency	0x03	0xD1	32.768 kbps	32.768 kbps	32753.32

4.2.2. FSK/OOK Transmission

4.2.2.1. FSK Modulation

FSK modulation is performed inside the PLL bandwidth, by changing the fractional divider ratio in the feedback loop of the PLL. The high resolution of the sigma-delta modulator, allows for very narrow frequency deviation. The frequency deviation F_{DEV} is given by:

$$F_{DEV} = F_{STEP} \times Fdev(13,0)$$

To ensure correct modulation, the following limit applies:

$$F_{DEV} + \frac{BR}{2} \leq (250)kHz$$

©2013 Semtech Corporation

Note No constraint applies to the modulation index of the transmitter, but the frequency deviation must be set between 600 Hz and 200 kHz.

4.2.2.2. OOK Modulation

OOK modulation is applied by switching on and off the power amplifier. Digital control and ramping are available to improve the transient power response of the OOK transmitter.

4.2.2.3. Modulation Shaping

Modulation shaping can be applied in both OOK and FSK modulation modes, to improve the narrowband response of the transmitter. Both shaping features are controlled with *PaRamp* bits in *RegPaRamp*.

- In FSK mode, a Gaussian filter with BT = 0.5 or 1 is used to filter the modulation stream, at the input of the sigma-delta modulator. If the Gaussian filter is enabled when the SX1276/77/78 is in Continuous mode, DCLK signal on pin 10 (DIO1/DCLK) will trigger an interrupt on the uC each time a new bit has to be transmitted. Please refer to section 5.4.2 for details.
- When OOK modulation is used, the PA bias voltages are ramped up and down smoothly when the PA is turned on and off, to reduce spectral splatter.

Note The transmitter must be restarted if the ModulationShaping setting is changed, in order to recalibrate the built-in filter.

4.2.3. FSK/OOK Reception

4.2.3.1. FSK Demodulator

The FSK demodulator of the SX1276/77/78 is designed to demodulate FSK, GFSK, MSK and GMSK modulated signals. It is most efficient when the modulation index of the signal is greater than 0.5 and below 10:

$$0.5 \leq \beta = \frac{2 \times F_{DEV}}{BR} \leq 10$$

The output of the FSK demodulator can be fed to the Bit Synchronizer to provide the companion processor with a synchronous data stream in Continuous mode.

4.2.3.2. OOK Demodulator

The OOK demodulator performs a comparison of the RSSI output and a threshold value. Three different threshold modes are available, configured through bits *OokThreshType* in *RegOokPeak*.

The recommended mode of operation is the “Peak” threshold mode, illustrated in Figure 13:

©2013 Semtech Corporation

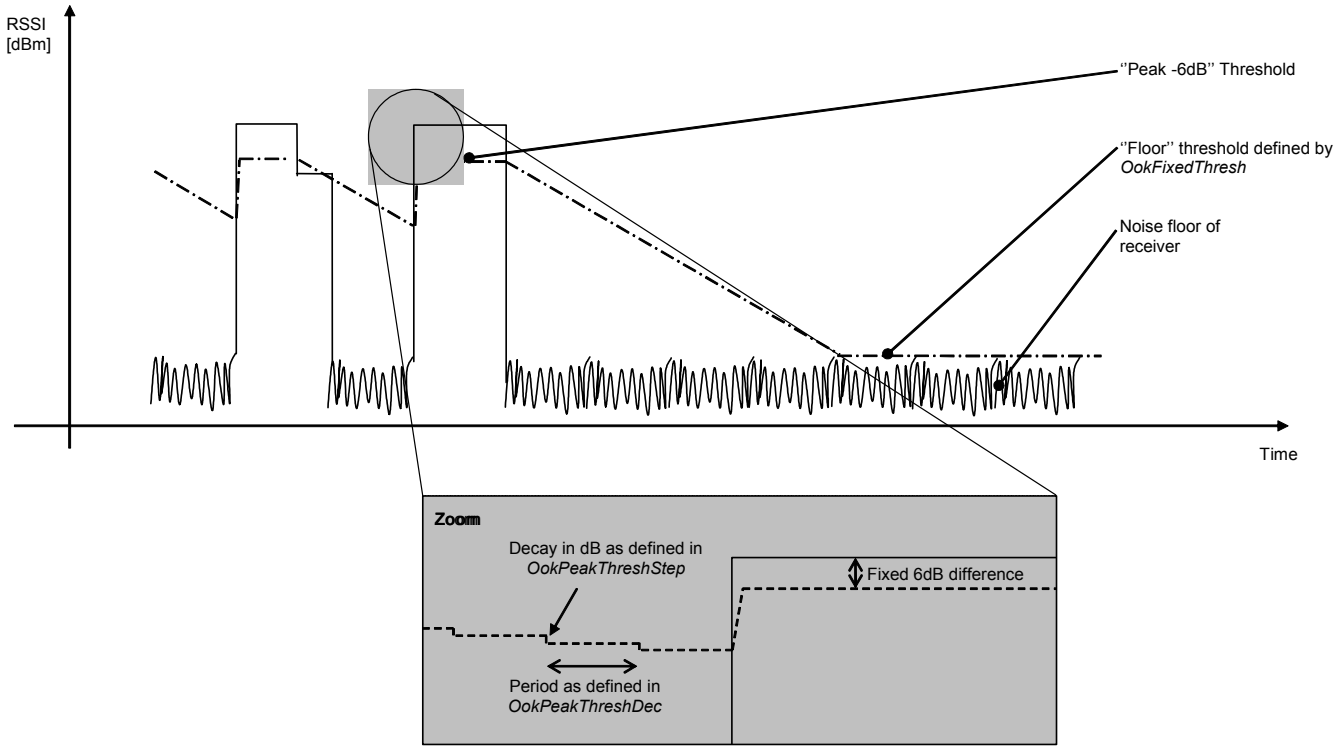

Figure 13. OOK Peak Demodulator Description

In peak threshold mode the comparison threshold level is the peak value of the RSSI, reduced by 6dB. In the absence of an input signal, or during the reception of a logical '0', the acquired peak value is decremented by one *OokPeakThreshStep* every *OokPeakThreshDec* period.

When the RSSI output is null for a long time (for instance after a long string of "0" received, or if no transmitter is present), the peak threshold level will continue falling until it reaches the "Floor Threshold", programmed in *OokFixedThresh*.

The default settings of the OOK demodulator lead to the performance stated in the electrical specification. However, in applications in which sudden signal drops are awaited during a reception, the three parameters should be optimized accordingly.

Optimizing the Floor Threshold

OokFixedThresh determines the sensitivity of the OOK receiver, as it sets the comparison threshold for weak input signals (i.e. those close to the noise floor). Significant sensitivity improvements can be generated if configured correctly.

Note that the noise floor of the receiver at the demodulator input depends on:

- The noise figure of the receiver.
- The gain of the receive chain from antenna to base band.
- The matching - including SAW filter if any.
- The bandwidth of the channel filters.

©2013 Semtech Corporation

It is therefore important to note that the setting of *OokFixedThresh* will be application dependant. The following procedure is recommended to optimize *OokFixedThresh*.

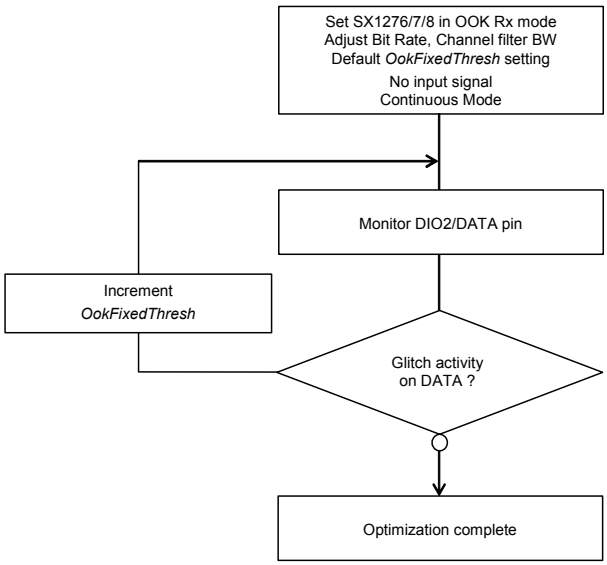

Figure 14. Floor Threshold Optimization

The new floor threshold value found during this test should be used for OOK reception with those receiver settings.

Optimizing OOK Demodulator for Fast Fading Signals

A sudden drop in signal strength can cause the bit error rate to increase. For applications where the expected signal drop can be estimated, the following OOK demodulator parameters *OokPeakThreshStep* and *OokPeakThreshDec* can be optimized as described below for a given number of threshold decrements per bit. Refer to *RegOokPeak* to access those settings.

©2013 Semtech Corporation

Alternative OOK Demodulator Threshold Modes

In addition to the Peak OOK threshold mode, the user can alternatively select two other types of threshold detectors:

- Fixed Threshold: The value is selected through *OokFixedThresh*
- Average Threshold: Data supplied by the RSSI block is averaged, and this operation mode should only be used with DC-free encoded data.

4.2.3.3. Bit Synchronizer

The bit synchronizer provides a clean and synchronized digital output based upon timing recovery information gleaned from the received data edge transitions. Its output is made available on pin DIO1/DCLK in Continuous mode and can be disabled through register settings. However, for optimum receiver performance, especially in Continuous receive mode, its use is strongly advised.

The Bit Synchronizer is automatically activated in Packet mode. Its bit rate is controlled by *BitRateMsb* and *BitRateLsb* in *RegBitrate.*

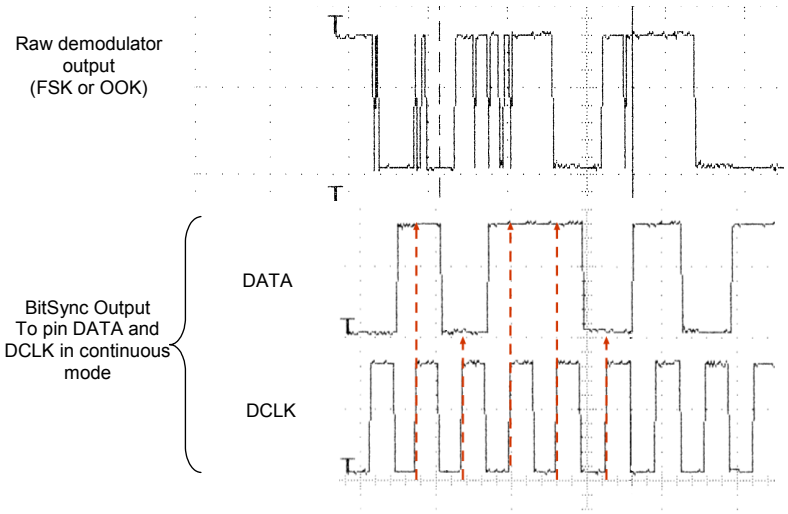

Figure 15. Bit Synchronizer Description

To ensure correct operation of the Bit Synchronizer, the following conditions have to be satisfied:

- A preamble (0x55 or 0xAA) of at least 12 bits is required for synchronization, the longer the synchronization phase is the better the ensuing packet detection rate will be.
- The subsequent payload bit stream must have at least one edge transition (either rising or falling) every 16 bits during data transmission.
- The absolute error between transmitted and received bit rate must not exceed 6.5%.

©2013 Semtech Corporation

4.2.3.4. Frequency Error Indicator

This frequency error indicator measures the frequency error between the programmed RF centre frequency and the carrier frequency of the modulated input signal to the receiver. When the FEI is performed, the frequency error is measured and the signed result is loaded in *FeiValue* in *RegFei*, in 2's complement format. The time required for an FEI evaluation is 4 bit periods.

To ensure correct operation of the FEI:

- The measurement must be launched during the reception of preamble.
- The sum of the frequency offset and the 20 dB signal bandwidth must be lower than the base band filter bandwidth. i.e. The whole modulated spectrum must be received.

The 20 dB bandwidth of the signal can be evaluated as follows (double-side bandwidth):

$$BW_{20dB} = 2 \times \left(F_{DEV} + \frac{BR}{2} \right)$$

The frequency error, in Hz, can be calculated with the following formula:

$$FEI = F_{STEP} \times FeiValue$$

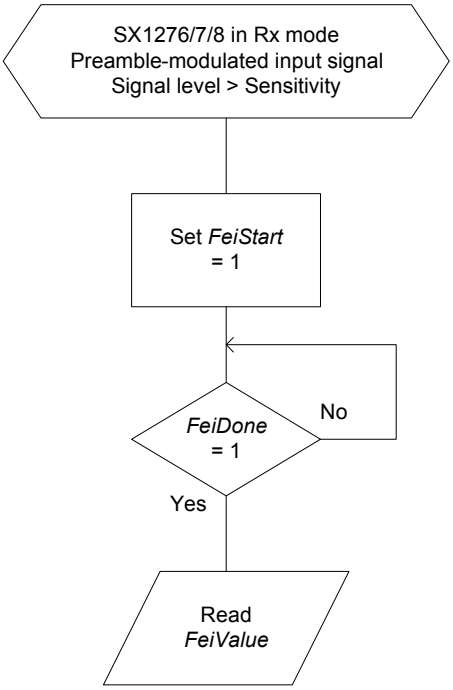

Figure 16. FEI Process

©2013 Semtech Corporation

4.2.3.5. AFC

The AFC is based on the FEI measurement, therefore the same input signal and receiver setting conditions apply. When the AFC procedure is performed the *AfcValue* is directly subtracted from the register that defines the frequency of operation of the chip, F_{RF}. The AFC is executed each time the receiver is enabled, if *AfcAutoOn* = 1.

When the AFC is enabled (*AfcAutoOn* = 1), the user has the option to:

- Clear the former AFC correction value, if *AfcAutoClearOn* = 1. Allowing the next frequency correction to be performed from the initial centre frequency.
- Start the AFC evaluation from the previously corrected frequency. This may be useful in systems in which the centre frequency experiences cumulative drift - such as the ageing of a crystal reference.

The SX1276/77/78 offers an alternate receiver bandwidth setting during the AFC phase allowing the accommodation of larger frequency errors. The setting *RegAfcBw* sets the receive bandwidth during the AFC process. In a typical receiver application the, once the AFC is performed, the radio will revert to the receiver communication or channel bandwidth (*RegRxBw*) for the ensuing communication phase.

Note that the FEI measurement is valid only during the reception of preamble. The provision of the *PreambleDetect* flag can hence be used to detect this condition and allow a reliable AFC or FEI operation to be triggered. This process can be performed automatically by using the appropriate options in *StartDemodOnPreamble* found in the *RegRxConfig* register.

A detailed description of the receiver setup to enable the AFC is provided in section 4.2.6.

4.2.3.6. Preamble Detector

The Preamble Detector indicates the reception of a carrier modulated with a 0101...sequence. It is insensitive to the frequency offset, as long as the receiver bandwidth is large enough. The size of detection can be programmed from 1 to 3 bytes with *PreambleDetectorSize* in *RegPreambleDetect* as defined in the next table.

Table 65 Preamble Detector Settings

PreambleDetectorSize	# of Bytes
00	1
01	2 (recommended)
10	3
11	reserved

For normal operation, *PreambleDetectTol* should be set to be set to 10 (0x0A), with a qualifying preamble size of 2 bytes.

The *PreambleDetect* interrupt (either in *RegIrqFlags1* or mapped to a specific DIO) then goes high every time a valid preamble is detected, assuming *PreambleDetectorOn*=1.

The preamble detector can also be used as a gate to ensure that AFC and AGC are performed on valid preamble. See section 4.2.6. for details.

©2013 Semtech Corporation

4.2.3.7. Image Rejection Mixer

The SX1276/77/78 employs an image rejection mixer (IRM) which, uncalibrated, 35 dB image rejection. A low phase noise PLL is used to perform calibration of the receiver chain. This increases the typical image rejection to 48 dB.

4.2.3.8. Image and RSSI Calibration

An automatic calibration process is used to calibrate the phase and gain of both I and Q receive paths. This calibration allows enhanced image frequency rejection and improves the RSSI precision. This Calibration process is launched under the following circumstances:

- Automatically at Power On Reset or after a Manual Reset of the chip (refer to section 7.2). For applications where the temperature remains stable, or if the Image Rejection is not a major concern, this single calibration will suffice.
- Automatically when a pre-defined temperature change is observed.
- Upon User request, by setting bit *ImageCalStart* in *RegImageCal*, when the device is in Standby mode. Note that in LoRa™ mode the calibration command is inaccessible. To perform the calibration, the radio must be returned temporarily to FSK/OOK mode for the calibration process.

A selectable temperature change, set with *TempThreshold* (5, 10, 15 or 20°C), is detected and reported in *TempChange*, if the temperature monitoring is turned On with *TempMonitorOff*=0.

This interrupt flag can be used by the application to launch a new image calibration at a convenient time if *AutoImageCalOn*=0, or immediately when this temperature variation is detected, if *AutoImageCalOn*=1.

The calibration process takes approximately 10ms.

4.2.3.9. Timeout Function

The SX1276/77/78 includes a Timeout function, which allows it to automatically shut-down the receiver after a receive sequence and therefore save energy.

- *Timeout* interrupt is generated *TimeoutRxRssi x 16 x Tbit* after switching to Rx mode if the *Rssi* flag does not raise within this time frame (*RssiValue* > *RssiThreshold*)
- *Timeout* interrupt is generated *TimeoutRxPreamble x 16 x Tbit* after switching to Rx mode if the *PreambleDetect* flag does not raise within this time frame
- *Timeout* interrupt is generated *TimeoutSignalSync x 16 x Tbit* after switching to Rx mode if the *SyncAddress* flag does not raise within this time frame

This timeout interrupt can be used to warn the companion processor to shut down the receiver and return to a lower power mode. To become active, these timeouts must also be enabled by setting the correct *RxTrigger* parameters in *RegRxConfig:*

Table 66 RxTrigger Settings to Enable Timeout Interrupts

Receiver Triggering Event	RxTrigger (2:0)	Timeout on Rssi	Timeout on Preamble	Timeout on SyncAddress
None	000	Off	Off	Active
Rssi Interrupt	001	Active	Off	
PreambleDetect	110	Off	Active	
Rssi Interrupt & *PreambleDetect*	111	Active	Active	

©2013 Semtech Corporation

4.2.4. Operating Modes in FSK/OOK Mode

The SX1276/77/78 has several working modes, manually programmed in *RegOpMode*. Fully automated mode selection, packet transmission and reception is also possible using the Top Level Sequencer described in Section 4.2.8.

Table 67 Basic Transceiver Modes

Mode	Selected mode	Symbol	Enabled blocks
000	Sleep mode	Sleep	None
001	Standby mode	Stdby	Top regulator and crystal oscillator
010	Frequency synthesiser to Tx frequency	FSTx	Frequency synthesizer at Tx frequency (Frf)
011	Transmit mode	Tx	Frequency synthesizer and transmitter
100	Frequency synthesiser to Rx frequency	FSRx	Frequency synthesizer at frequency for reception (Frf-IF)
101	Receive mode	Rx	Frequency synthesizer and receiver

When switching from a mode to another the sub-blocks are woken up according to a pre-defined optimized sequence.

4.2.5. Startup Times

The startup time of the transmitter or the receiver is dependant upon which mode the transceiver was in at the beginning. For a complete description, Figure 17 below shows a complete startup process, from the lower power mode “Sleep”.

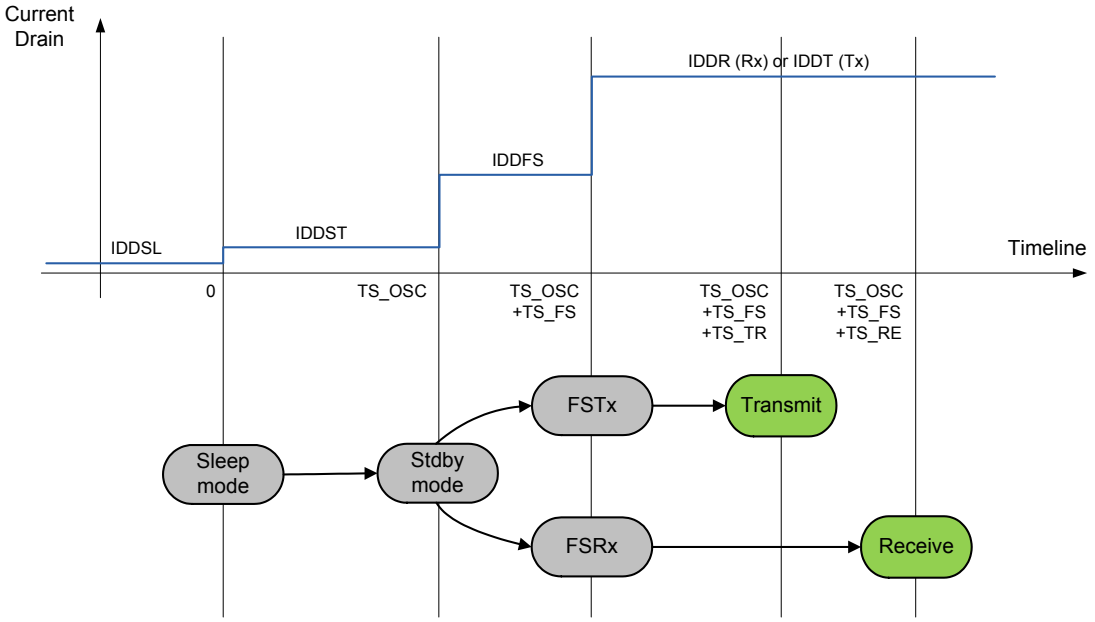

Figure 17. Startup Process

TS_OSC is the startup time of the crystal oscillator which depends on the electrical characteristics of the crystal. TS_FS is the startup time of the PLL including systematic calibration of the VCO.

Typical values of TS_OSC and TS_FS are given in Section 2.3.

©2013 Semtech Corporation

4.2.5.1. Transmitter Startup Time

The transmitter startup time, TS_TR, is calculated as follows in FSK mode:

$$TS_TR = 5\mu s + 1.25 \times PaRamp + \frac{1}{2} \times Tbit$$

,

where *PaRamp* is the ramp-up time programmed in *RegPaRamp* and *Tbit* is the bit time.

In OOK mode, this equation can be simplified to the following:

$$TS_TR = 5\mu s + \frac{1}{2} \times Tbit$$

4.2.5.2. Receiver Startup Time

The receiver startup time, TS_RE, only depends upon the receiver bandwidth effective at the time of startup. When AFC is enabled (*AfcAutoOn*=1), *AfcBw* should be used instead of *RxBw* to extract the receiver startup time:

Table 68 Receiver Startup Time Summary

RxBw* if *AfcAutoOn=0* *RxBwAfc* if *AfcAutoOn=1	**TS_RE (+/-5%)**
2.6 kHz	2.33 ms
3.1 kHz	1.94 ms
3.9 kHz	1.56 ms
5.2 kHz	1.18 ms
6.3 kHz	984 us
7.8 kHz	791 us
10.4 kHz	601 us
12.5 kHz	504 us
15.6 kHz	407 us
20.8 kHz	313 us
25.0 kHz	264 us
31.3 kHz	215 us
41.7 kHz	169 us
50.0 kHz	144 us
62.5 kHz	119 us
83.3 kHz	97 us
100.0 kHz	84 us
125.0 kHz	71 us
166.7 kHz	85 us
200.0 kHz	74 us
250.0 kHz	63 us

TS_RE or later after setting the device in Receive mode, any incoming packet will be detected and demodulated by the transceiver.

©2013 Semtech Corporation

4.2.5.3. Time to RSSI Evaluation

The first RSSI sample will be available TS_RSSI after the receiver is ready, in other words TS_RE + TS_RSSI after the receiver was requested to turn on.

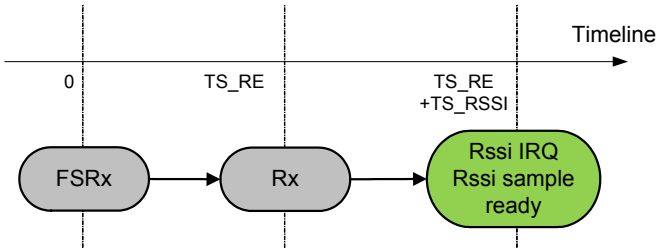

Figure 18. Time to Rssi Sample

TS_RSSI depends on the receiver bandwidth, as well as the *RssiSmoothing* option that was selected. The formula used to calculate TS_RSSI is provided in section 2.5.4.

4.2.5.4. Tx to Rx Turnaround Time

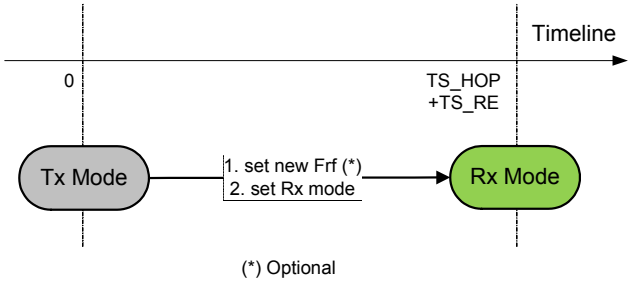

Figure 19. Tx to Rx Turnaround

Note The SPI instruction times are omitted, as they can generally be very small as compared to other timings (up to 10MHz SPI clock).

4.2.5.5. Rx to Tx

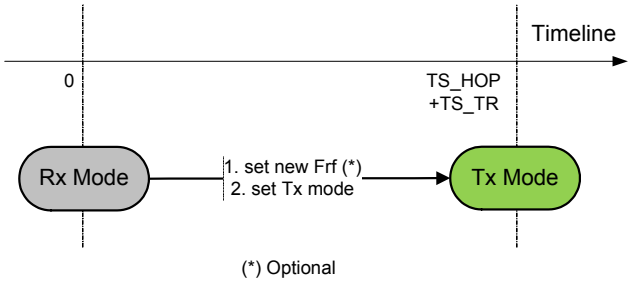

Figure 20. Rx to Tx Turnaround

©2013 Semtech Corporation

4.2.5.6. Receiver Hopping, Rx to Rx

Two methods are possible:

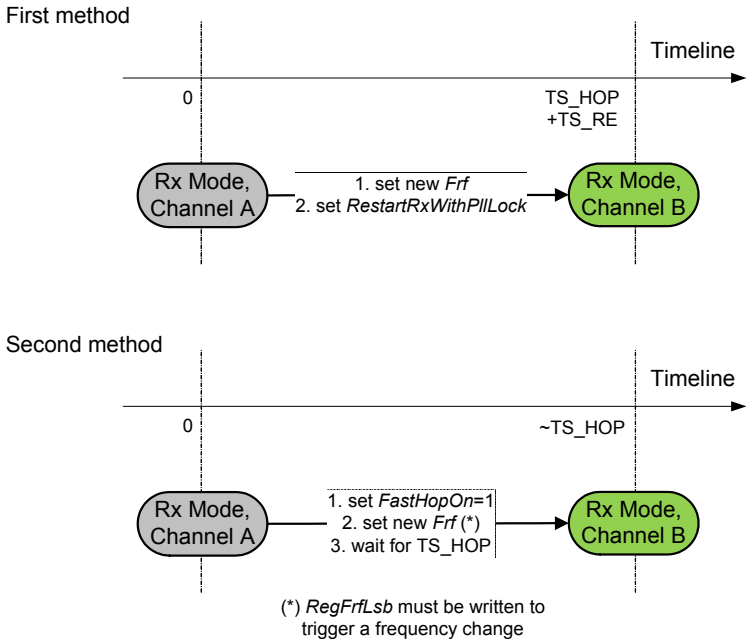

Figure 21. Receiver Hopping

The second method is quicker, and should be used if a very quick RF sniffing mechanism is to be implemented.

4.2.5.7. Tx to Tx

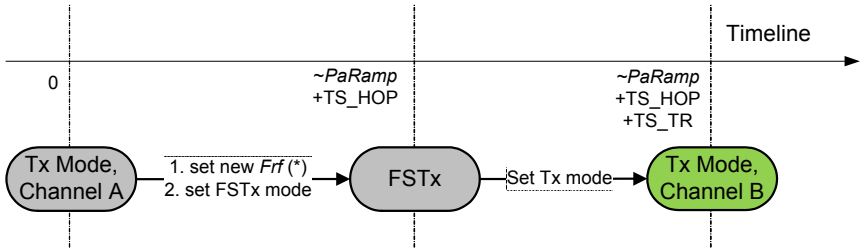

Figure 22. Transmitter Hopping

4.2.6. Receiver Startup Options

The SX1276/77/78 receiver can automatically control the gain of the receive chain (AGC) and adjust the receiver LO frequency (AFC). Those processes are carried out on a packet-by-packet basis. They occur:

- When the receiver is turned On.
- When the Receiver is restarted upon user request, through the use of trigger bits *RestartRxWithoutPllLock* or *RestartRxWithPllLock*, in *RegRxConfig*.
- When the receiver is automatically restarted after the reception of a valid packet, or after a packet collision.

©2013 Semtech Corporation

Automatic restart capabilities are detailed in Section 4.2.7.

The receiver startup options available in SX1276/77/78 are described in Table 69.

Table 69 Receiver Startup Options

Triggering Event	Realized Function	*AgcAutoOn*	*AfcAutoOn*	*RxTrigger (2:0)*
None	None	0	0	000
Rssi Interrupt	AGC	1	0	001
	AGC & AFC	1	1	001
PreambleDetect	AGC	1	0	110
	AGC & AFC	1	1	110
Rssi Interrupt & *PreambleDetect*	AGC	1	0	111
	AGC & AFC	1	1	111

When *AgcAutoOn*=0, the LNA gain is manually selected by choosing *LnaGain* bits in *RegLna.*

4.2.7. Receiver Restart Methods

The options for restart of the receiver are covered below. This is typically of use to prepare for the reception of a new signal whose strength or carrier frequency is different from the preceding packet to allow the AGC or AFC to be re-evaluated.

4.2.7.1. Restart Upon User Request

In Receive mode the user can request a receiver restart - this can be useful in conjunction with the use of a Timeout interrupt following a period of inactivity in the channel of interest. Two options are available:

- No change in the Local Oscillator upon restart: the AFC is disabled, and the *Frf* register has not been changed through SPI before the restart instruction: set bit *RestartRxWithoutPllLock* in *RegRxConfig* to 1.
- Local Oscillator change upon restart: if AFC is enabled (*AfcAutoOn*=1), and/or the *Frf* register had been changed during the last Rx period: set bit *RestartRxWithPllLock* in *RegRxConfig* to 1.

Note ModeReady must be at logic level 1 for a new RestartRx command to be taken into account.

4.2.7.2. Automatic Restart after valid Packet Reception

The bits *AutoRestartRxMode* in *RegSyncConfig* control the automatic restart feature of the SX1276/77/78 receiver, when a valid packet has been received:

- If *AutoRestartRxMode* = 00, the function is off, and the user should manually restart the receiver upon valid packet reception (see section 4.2.7.1*).*
- If *AutoRestartRxMode* = 01, after the user has emptied the FIFO following a *PayloadReady* interrupt, the receiver will automatically restart itself after a delay of *InterPacketRxDelay*, allowing for the distant transmitter to ramp down, hence avoiding a false RSSI detection on the ‘tail’ of the previous packet.
- If *AutoRestartRxMode* = 10 should be used if the next reception is expected on a new frequency, i.e. *Frf* is changed after the reception of the previous packet. An additional delay is systematically added, in order for the PLL to lock at a new frequency.

©2013 Semtech Corporation

4.2.7.3. Automatic Restart when Packet Collision is Detected

In receive mode the SX1276/77/78 is able to detect packet collision and restart the receiver. Collisions are detected by a sudden rise in received signal strength, detected by the RSSI. This functionality can be useful in network configurations where many asynchronous slaves attempt periodic communication with a single a master node.

The collision detector is enabled by setting bit *RestartRxOnCollision* to 1.

The decision to restart the receiver is based on the detection of RSSI change. The sensitivity of the system can be adjusted in 1 dB steps by using register *RssiCollisionThreshold* in *RegRxConfig*.

4.2.8. Top Level Sequencer

Depending on the application, it is desirable to be able to change the mode of the circuit according to a predefined sequence without access to the serial interface. In order to define different sequences or scenarios, a user-programmable state machine, called Top Level Sequencer (Sequencer in short), can automatically control the chip modes.

NOTE THAT THIS FUNCTIONALITY IS ONLY AVAILABLE IN FSK/OOK MODE.

The Sequencer is activated by setting the *SequencerStart* bit in *RegSeqConfig1* to 1 in Sleep or Standby mode (called initial mode).

It is also possible to force the Sequencer off by setting the *Stop* bit in *RegSeqConfig1* to 1 at any time.

Note SequencerStart and Stop bit must never be set at the same time.

4.2.8.1. Sequencer States

As shown in the table below, with the aid of a pair of interrupt timers (T1 and T2), the sequencer can take control of the chip operation in all modes.

Table 70 Sequencer States

Sequencer State	Description
SequencerOff State	The Sequencer is not activated. Sending a *SequencerStart* command will launch it. When coming from **LowPowerSelection** state, the Sequencer will be Off, whilst the chip will return to its initial mode (either Sleep or Standby mode).
Idle State	The chip is in low-power mode, either *Standby* or *Sleep*, as defined by *IdleMode* in *RegSeqConfig1*. The Sequencer waits only for the *T1* interrupt.
Transmit State	The transmitter in on.
Receive State	The receiver in on.
PacketReceived	The receiver is on and a packet has been received. It is stored in the FIFO.
LowPowerSelection	Selects low power state (**SequencerOff** or **Idle** State)
RxTimeout	Defines the action to be taken on a RxTimeout interrupt. RxTimeout interrupt can be a *TimeoutRxRssi*, *TimeoutRxPreamble* or *TimeoutSignalSync* interrupt.

©2013 Semtech Corporation

4.2.8.2. Sequencer Transitions

The transitions between sequencer states are listed in the forthcoming table.

Table 71 Sequencer Transition Options

Variable	Transition
IdleMode	Selects the chip mode during **Idle** state: 0: *Standby* mode 1: *Sleep* mode
FromStart	Controls the Sequencer transition when the *SequencerStart* bit is set to 1 in *Sleep* or *Standby* mode: 00: to **LowPowerSelection** 01: to **Receive** state 10: to **Transmit** state 11: to **Transmit** state on a *FifoThreshold* interrupt
LowPowerSelection	Selects Sequencer LowPower state after a *to LowPowerSelection* transition 0: **SequencerOff** state with chip on Initial mode 1: **Idle** state with chip on *Standby* or *Sleep* mode depending on **IdleMode** Note: Initial mode is the chip LowPower mode at Sequencer start.
FromIdle	Controls the Sequencer transition from the **Idle** state on a *T1* interrupt: 0: to **Transmit** state 1: to **Receive** state
FromTransmit	Controls the Sequencer transition from the **Transmit** state: 0: to **LowPowerSelection** on a *PacketSent* interrupt 1: to **Receive** state on a *PacketSent* interrupt
FromReceive	Controls the Sequencer transition from the **Receive** state: 000 and 111: unused 001: to **PacketReceived** state on a *PayloadReady* interrupt 010: to **LowPowerSelection** on a *PayloadReady* interrupt 011: to **PacketReceived** state on a *CrcOk* interrupt. If CRC is wrong (corrupted packet, with CRC on but CrcAutoClearOn is off), the PayloadReady interrupt will drive the sequencer to RxTimeout state. 100: to **SequencerOff** state on a *Rssi* interrupt 101: to **SequencerOff** state on a *SyncAddress* interrupt 110: to **SequencerOff** state on a *PreambleDetect* interrupt Irrespective of this setting, transition to **LowPowerSelection** on a *T2* interrupt
FromRxTimeout	Controls the state-machine transition from the **Receive** state on a *RxTimeout* interrupt (and on *PayloadReady* if **FromReceive** = 011): 00: to **Receive** state via *ReceiveRestart* 01: to **Transmit** state 10: to **LowPowerSelection** 11: to **SequencerOff** state Note: RxTimeout interrupt is a *TimeoutRxRssi*, *TimeoutRxPreamble* or *TimeoutSignalSync* interrupt.
FromPacketReceived	Controls the state-machine transition from the **PacketReceived** state: 000: to **SequencerOff** state 001: to **Transmit** on a *FifoEmpty* interrupt 010: to **LowPowerSelection** 011: to **Receive** via *FS* mode, if frequency was changed 100: to **Receive** state (no frequency change)

©2013 Semtech Corporation

4.2.8.3. Timers

Two timers (Timer1 and Timer2) are also available in order to define periodic sequences. These timers are used to generate interrupts, which can trigger transitions of the Sequencer.

T1 interrupt is generated (Timer1Resolution * Timer1Coefficient) after ***T2* interrupt** or ***SequencerStart***. command.
T2 interrupt is generated (Timer2Resolution * Timer2Coefficient) after ***T1* interrupt**.

The timers' mechanism is summarized on the following diagram.

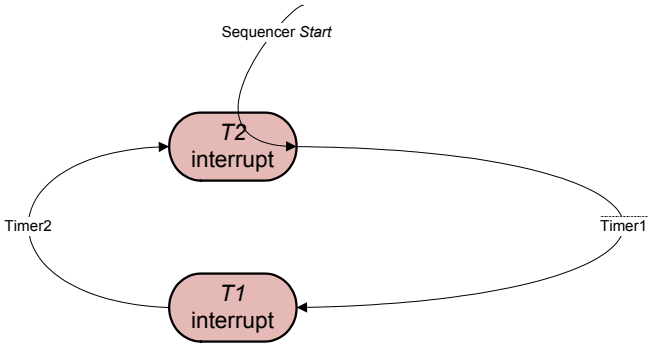

Figure 23. Timer1 and Timer2 Mechanism

Note The timer sequence is completed independently of the actual Sequencer state. Thus, both timers need to be on to achieve periodic cycling.

©2013 Semtech Corporation

Table 72 Sequencer Timer Settings

Variable	Description
Timer1Resolution	Resolution of Timer1 00: disabled 01: 64 us 10: 4.1 ms 11: 262 ms
Timer2Resolution	Resolution of Timer2 00: disabled 01: 64 us 10: 4.1 ms 11: 262 ms
Timer1Coefficient	Multiplying coefficient for Timer1
Timer2Coefficient	Multiplying coefficient for Timer2

©2013 Semtech Corporation

4.2.8.4. Sequencer State Machine

The following graphs summarize every possible transition between each Sequencer state. The Sequencer states are highlighted in grey. The transitions are represented by arrows. The condition activating them is described over the transition arrow. For better readability, the start transitions are separated from the rest of the graph.

Transitory states are highlighted in light grey, and exit states are represented in red. It is also possible to force the Sequencer off by setting the *Stop* bit in *RegSeqConfig1* to 1 at any time.

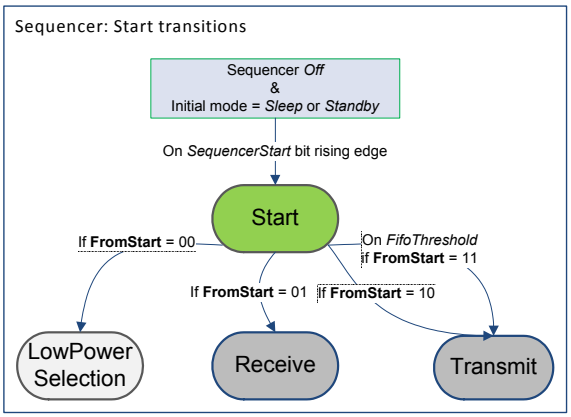

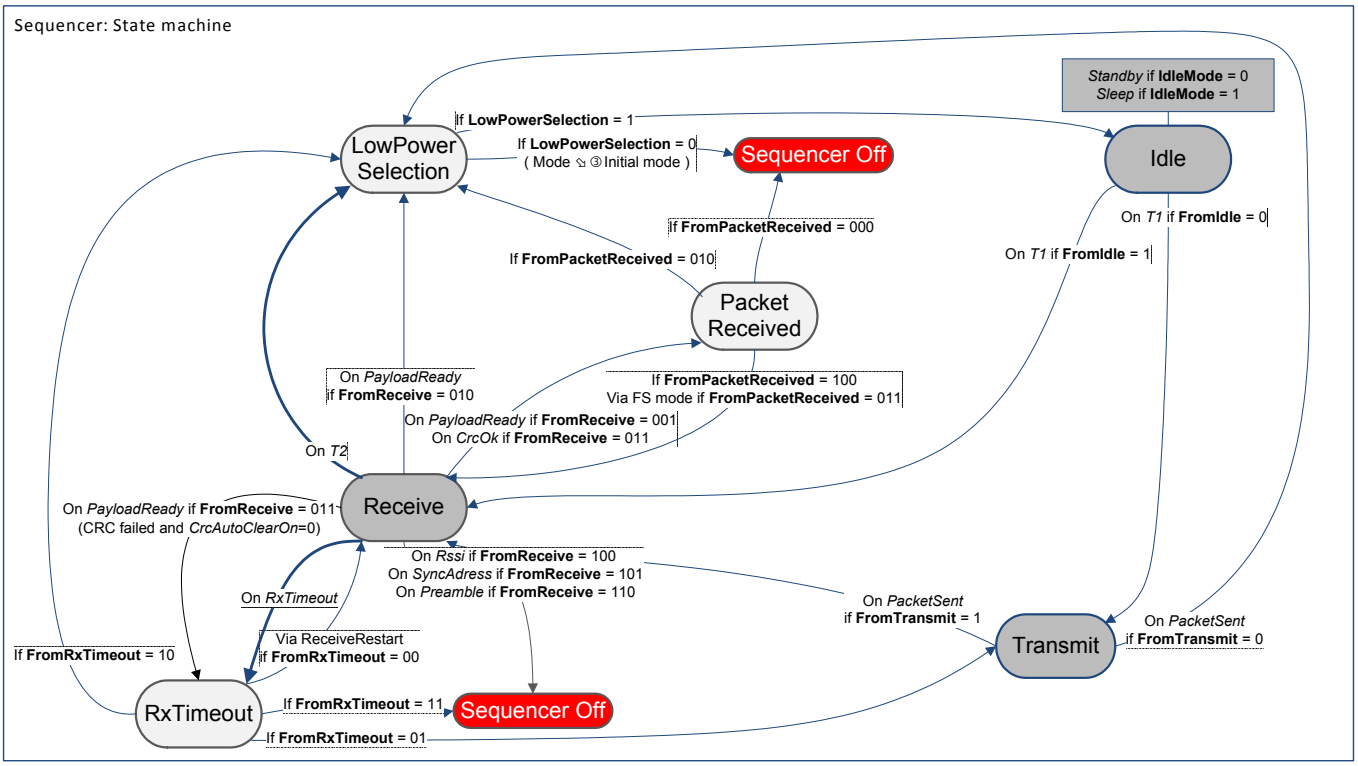

Figure 24. Sequencer State Machine

©2013 Semtech Corporation

4.2.9. Data Processing in FSK/OOK Mode

4.2.9.1. Block Diagram

Figure below illustrates the SX1276/77/78 data processing circuit. Its role is to interface the data to/from the modulator/ demodulator and the uC access points (SPI and DIO pins). It also controls all the configuration registers.

The circuit contains several control blocks which are described in the following paragraphs.

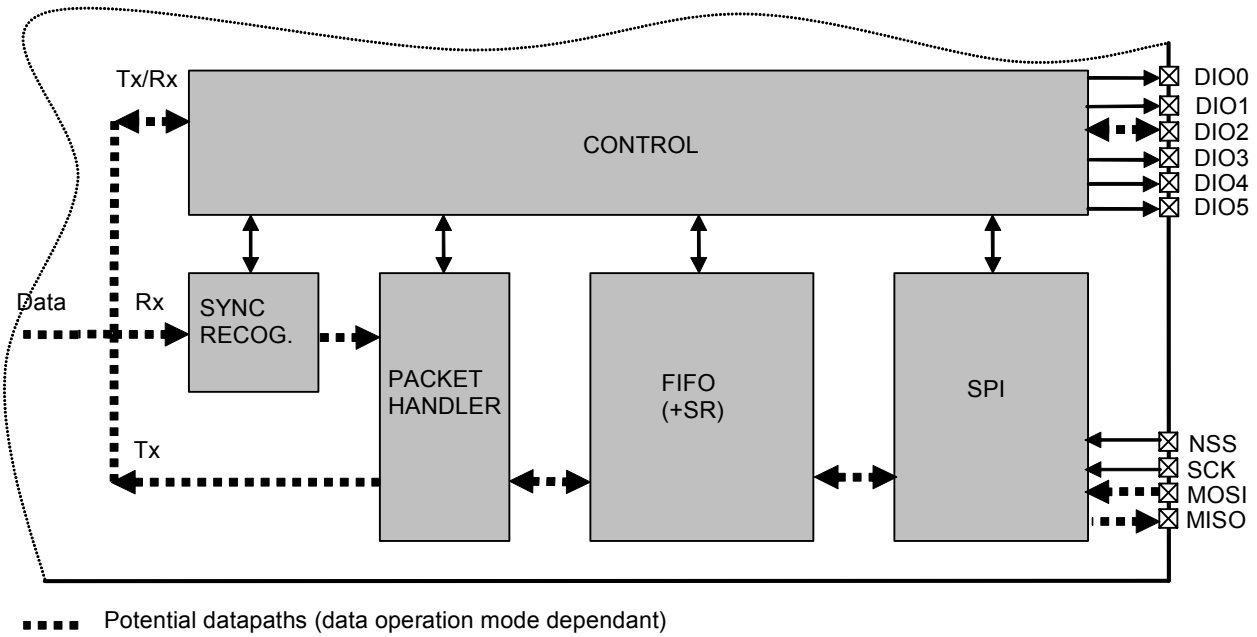

Figure 25. SX1276/77/78 Data Processing Conceptual View

The SX1276/77/78 implements several data operation modes, each with their own data path through the data processing section. Depending on the data operation mode selected, some control blocks are active whilst others remain disabled.

4.2.9.2. Data Operation Modes

The SX1276/77/78 has two different data operation modes selectable by the user:

- Continuous mode: each bit transmitted or received is accessed in real time at the DIO2/DATA pin. This mode may be used if adequate external signal processing is available.
- Packet mode (recommended): user only provides/retrieves payload bytes to/from the FIFO. The packet is automatically built with preamble, Sync word, and optional CRC and DC-free encoding schemes The reverse operation is performed in reception. The uC processing overhead is hence significantly reduced compared to Continuous mode. Depending on the optional features activated (CRC, etc) the maximum payload length is limited to 255, 2047 bytes or unlimited.

Each of these data operation modes is fully described in the following sections.

©2013 Semtech Corporation

4.2.10. FIFO

Overview and Shift Register (SR)

In packet mode of operation, both data to be transmitted and that has been received are stored in a configurable FIFO (First In First Out) device. It is accessed via the SPI interface and provides several interrupts for transfer management.

The FIFO is 1 byte wide hence it only performs byte (parallel) operations, whereas the demodulator functions serially. A shift register is therefore employed to interface the two devices. In transmit mode it takes bytes from the FIFO and outputs them serially (MSB first) at the programmed bit rate to the modulator. Similarly, in Rx the shift register gets bit by bit data from the demodulator and writes them byte by byte to the FIFO. This is illustrated in figure below.

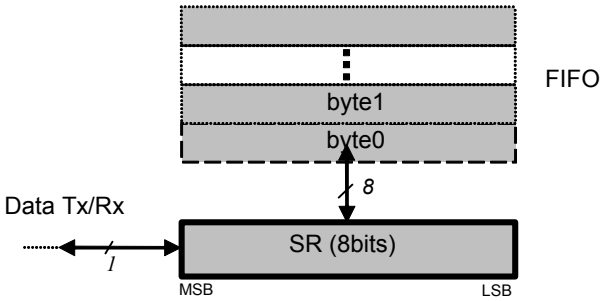

Figure 26. FIFO and Shift Register (SR)

Note When switching to Sleep mode, the FIFO can only be used once the ModeReady flag is set (quasi immediate from all modes except from Tx)

The FIFO size is fixed to 64 bytes.

Interrupt Sources and Flags

- *FifoEmpty*: *FifoEmpty* interrupt source is high when byte 0, i.e. whole FIFO, is empty. Otherwise it is low. Note that when retrieving data from the FIFO, *FifoEmpty* is updated on NSS falling edge, i.e. when *FifoEmpty* is updated to low state the currently started read operation must be completed. In other words, *FifoEmpty* state must be checked after each read operation for a decision on the next one (*FifoEmpty* = 0: more byte(s) to read; *FifoEmpty* = 1: no more byte to read).
- *FifoFull*: *FifoFull* interrupt source is high when the last FIFO byte, i.e. the whole FIFO, is full. Otherwise it is low.
- *FifoOverrunFlag*: *FifoOverrunFlag* is set when a new byte is written by the user (in Tx or Standby modes) or the SR (in Rx mode) while the FIFO is already full. Data is lost and the flag should be cleared by writing a 1, note that the FIFO will also be cleared.
- *PacketSent*: *PacketSent* interrupt source goes high when the SR's last bit has been sent.
- *FifoLevel*: Threshold can be programmed by *FifoThreshold* in *RegFifoThresh*. Its behavior is illustrated in figure below.

©2013 Semtech Corporation

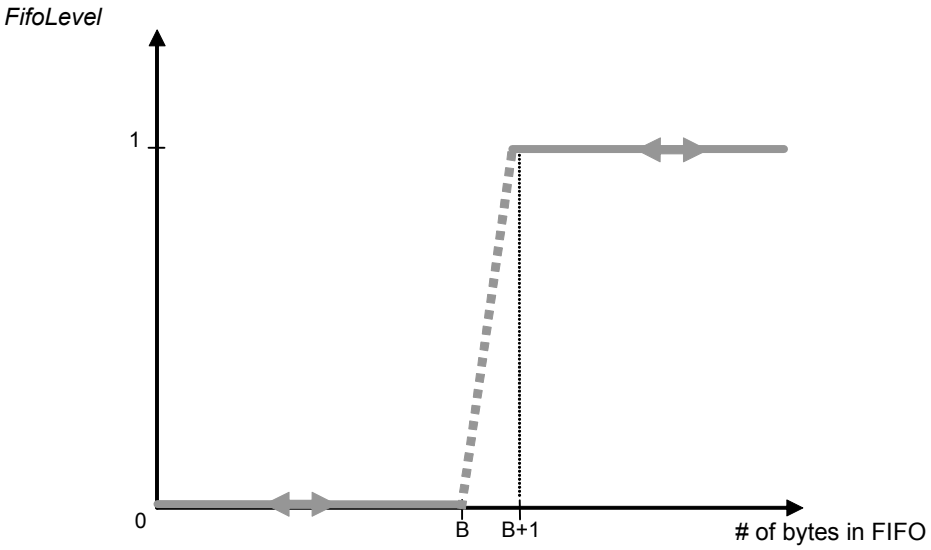

Figure 27. FifoLevel IRQ Source Behavior

Notes - FifoLevel interrupt is updated only after a read or write operation on the FIFO. Thus the interrupt cannot be dynamically updated by only changing the FifoThreshold parameter

- FifoLevel interrupt is valid as long as FifoFull does not occur. An empty FIFO will restore its normal operation

FIFO Clearing

Table below summarizes the status of the FIFO when switching between different modes

Table 73 Status of FIFO when Switching Between Different Modes of the Chip

From	To	FIFO status	Comments
Stdby	Sleep	Not cleared	
Sleep	Stdby	Not cleared	
Stdby/Sleep	Tx	Not cleared	To allow the user to write the FIFO in Stdby/Sleep before Tx
Stdby/Sleep	Rx	Cleared	
Rx	Tx	Cleared	
Rx	Stdby/Sleep	Not cleared	To allow the user to read FIFO in Stdby/Sleep mode after Rx
Tx	Any	Cleared	

4.2.10.1. Sync Word Recognition

Overview

Sync word recognition (also called Pattern recognition) is activated by setting *SyncOn* in *RegSyncConfig*. The bit synchronizer must also be activated in Continuous mode (automatically done in Packet mode).

The block behaves like a shift register; it continuously compares the incoming data with its internally programmed Sync word and sets *SyncAddressMatch* when a match is detected. This is illustrated in Figure 28 below.

©2013 Semtech Corporation

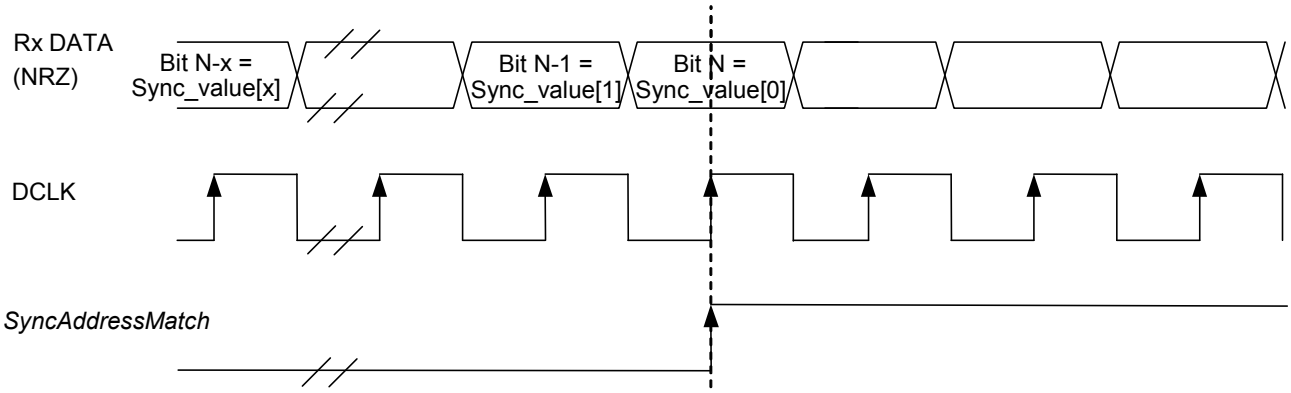

Figure 28. Sync Word Recognition

During the comparison of the demodulated data, the first bit received is compared with bit 7 (MSB) of *RegSyncValue1* and the last bit received is compared with bit 0 (LSB) of the last byte whose address is determined by the length of the Sync word.

When the programmed Sync word is detected the user can assume that this incoming packet is for the node and can be processed accordingly.

SyncAddressMatch is cleared when leaving Rx or FIFO is emptied.

Configuration

- Size: Sync word size can be set from 1 to 8 bytes (i.e. 8 to 64 bits) via *SyncSize* in *RegSyncConfig*. In Packet mode this field is also used for Sync word generation in Tx mode.
- Value: The Sync word value is configured in *SyncValue(63:0)*. In Packet mode this field is also used for Sync word generation in Tx mode.

Note SyncValue choices containing 0x00 bytes are not allowed

Packet Handler

The packet handler is the block used in Packet mode. Its functionality is fully described in section 4.2.13.

Control

The control block configures and controls the full chip's behavior according to the settings programmed in the configuration registers.

©2013 Semtech Corporation

4.2.11. Digital IO Pins Mapping

Six general purpose IO pins are available on the SX1276/77/78, and their configuration in Continuous or Packet mode is controlled through *RegDioMapping1* and *RegDioMapping2.*

Table 74 DIO Mapping, Continuous Mode

	DIOx Mapping	Sleep	Standby	FSRx/Tx	Rx	Tx
DIO0	00	-			SyncAddress	TxReady
	01	-			Rssi / PreambleDetect	-
	10	-			RxReady	TxReady
	11	-				
DIO1	00	-			Dclk	
	01	-			Rssi / PreambleDetect	-
	10	-				
	11	-				
DIO2	00	-			Data	
	01	-			Data	
	10	-			Data	
	11	-			Data	
DIO3	00	-			Timeout	-
	01	-			Rssi / PreambleDetect	-
	10	-				
	11	-	TempChange / LowBat		TempChange / LowBat	
DIO4	00	-		TempChange / LowBat		
	01	-		PllLock		
	10	-			TimeOut	-
	11	-	ModeReady		ModeReady	
DIO5	00	ClkOut if RC	ClkOut		ClkOut	
	01	-		PllLock		
	10	-			Rssi / PreambleDetect	-
	11	-	ModeReady		ModeReady	

Table 75 DIO Mapping, Packet Mode

	DIOx Mapping	Sleep	Standby	FSRx/Tx	Rx	Tx
DIO0	00	-			PayloadReady	PacketSent
	01	-			CrcOk	-
	10	-				
	11	-	TempChange / LowBat		TempChange / LowBat	
DIO1	00	FifoLevel		FifoLevel	FifoLevel	
	01	FifoEmpty		FifoEmpty	FifoEmpty	
	10	FifoFull		FifoFull	FifoFull	
	11	-				
DIO2	00	FifoFull		FifoFull	FifoFull	
	01	-			RxReady	-
	10	FifoFull			TimeOut	FifoFull
	11	FifoFull			SyncAddress	FifoFull
DIO3	00	FifoEmpty		FifoEmpty	FifoEmpty	
	01	-				TxReady
	10	FifoEmpty		FifoEmpty	FifoEmpty	
	11	FifoEmpty		FifoEmpty	FifoEmpty	
DIO4	00	-	TempChange / LowBat		TempChange / LowBat	
	01	-		PllLock		
	10	-			TimeOut	-
	11	-			Rssi / PreambleDetect	-
DIO5	00	ClkOut if RC	ClkOut		ClkOut	
	01	-		PllLock		
	10	-			Data	
	11	-	ModeReady		ModeReady	

©2013 Semtech Corporation

4.2.12. Continuous Mode

4.2.12.1. General Description

As illustrated in Figure 29, in Continuous mode the NRZ data to (from) the (de)modulator is directly accessed by the uC on the bidirectional DIO2/DATA pin. The FIFO and packet handler are thus inactive.

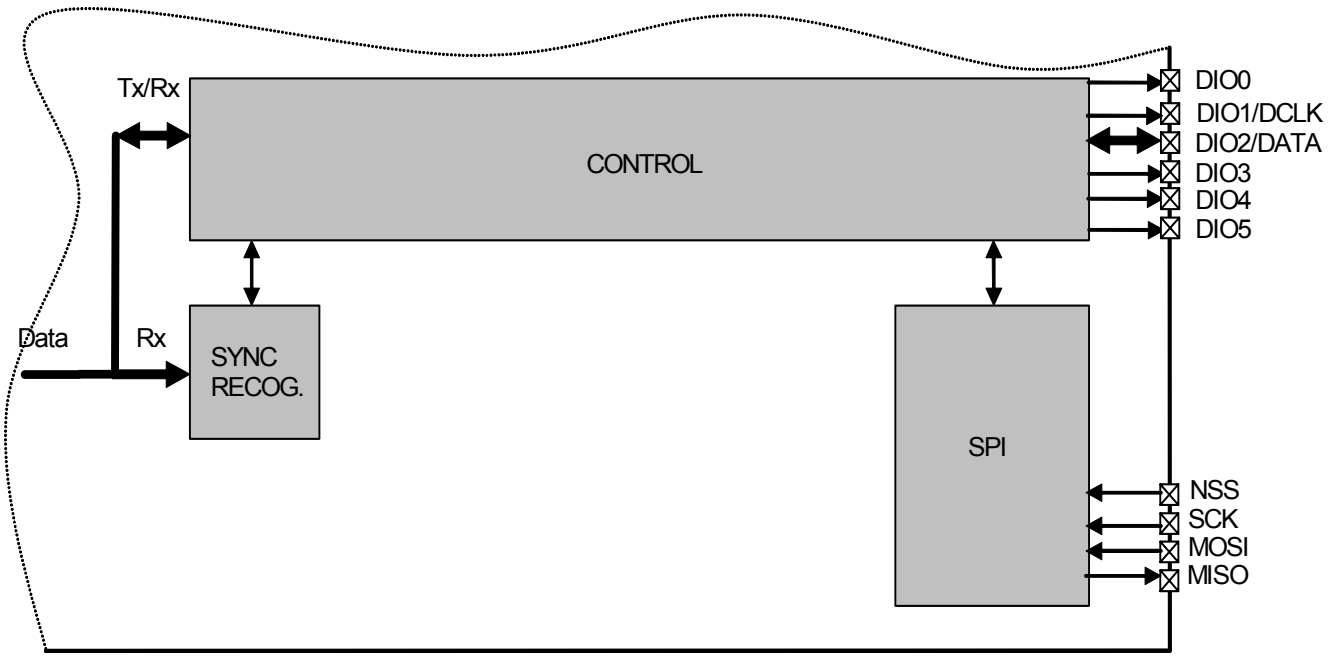

Figure 29. Continuous Mode Conceptual View

4.2.12.2. Tx Processing

In Tx mode, a synchronous data clock for an external uC is provided on DIO1/DCLK pin. Clock timing with respect to the data is illustrated in Figure 30. DATA is internally sampled on the rising edge of DCLK so the uC can change logic state anytime outside the grayed out setup/hold zone.

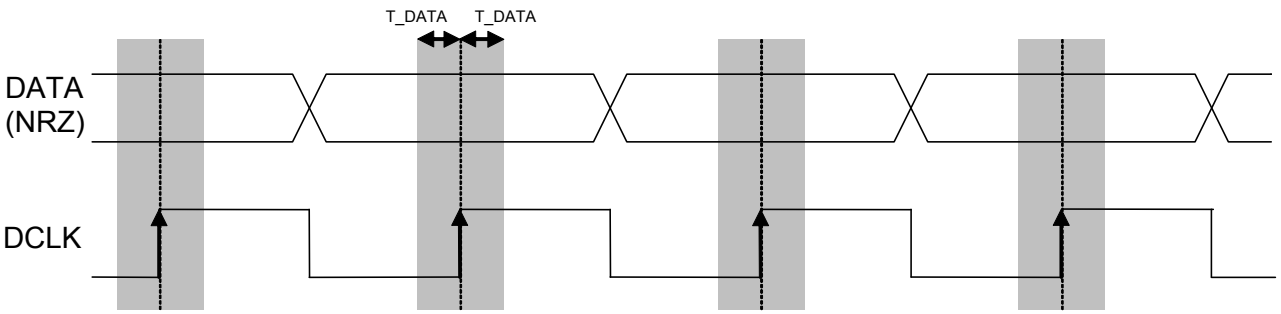

Figure 30. Tx Processing in Continuous Mode

Note the use of DCLK is required when the modulation shaping is enabled (see section 3.4.5).

©2013 Semtech Corporation

4.2.12.3. Rx Processing

If the bit synchronizer is disabled, the raw demodulator output is made directly available on DATA pin and no DCLK signal is provided.

Conversely, if the bit synchronizer is enabled, synchronous cleaned data and clock are made available respectively on DIO2/DATA and DIO1/DCLK pins. DATA is sampled on the rising edge of DCLK and updated on the falling edge as illustrated below.

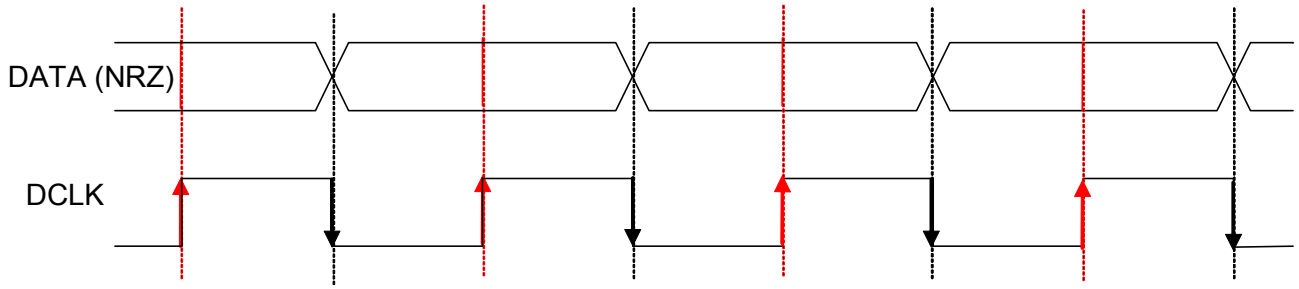

Figure 31. Rx Processing in Continuous Mode

Note In Continuous mode it is always recommended to enable the bit synchronizer to clean the DATA signal even if the DCLK signal is not used by the uC (bit synchronizer is automatically enabled in Packet mode).

4.2.13. Packet Mode

4.2.13.1. General Description

In Packet mode the NRZ data to (from) the (de)modulator is not directly accessed by the uC but stored in the FIFO and accessed via the SPI interface.

In addition, the SX1276/77/78 packet handler performs several packet oriented tasks such as Preamble and Sync word generation, CRC calculation/check, whitening/dewhitening of data, Manchester encoding/decoding, address filtering, etc. This simplifies software and reduces uC overhead by performing these repetitive tasks within the RF chip itself.

Another important feature is ability to fill and empty the FIFO in Sleep/Stdby mode, ensuring optimum power consumption and adding more flexibility for the software.

©2013 Semtech Corporation

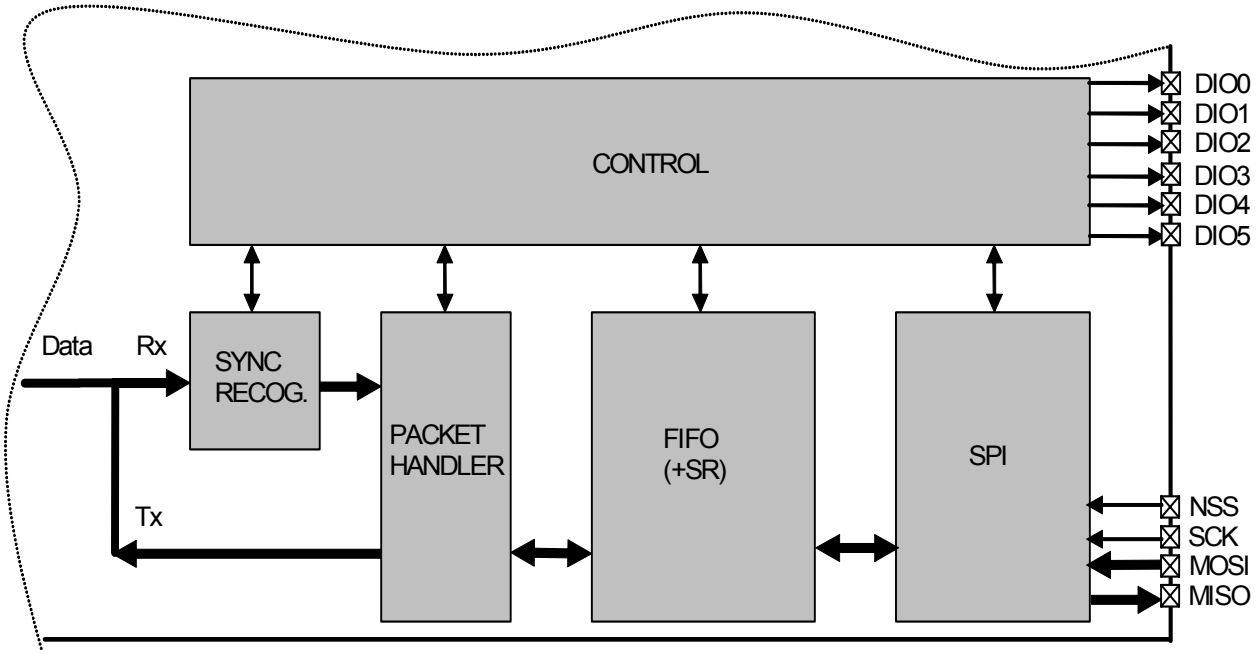

Figure 32. Packet Mode Conceptual View

Note The Bit Synchronizer is automatically enabled in Packet mode.

4.2.13.2. Packet Format

Fixed Length Packet Format

Fixed length packet format is selected when bit *PacketFormat* is set to 0 and *PayloadLength* is set to any value greater than 0.

In applications where the packet length is fixed in advance, this mode of operation may be of interest to minimize RF overhead (no length byte field is required). All nodes, whether Tx only, Rx only, or Tx/Rx should be programmed with the same packet length value.

The length of the payload is limited to 2047 bytes.

The length programmed in *PayloadLength* relates only to the payload which includes the message and the optional address byte. In this mode, the payload must contain at least one byte, i.e. address or message byte.

An illustration of a fixed length packet is shown below. It contains the following fields:

- Preamble (1010...)
- Sync word (Network ID)
- Optional Address byte (Node ID)
- Message data
- Optional 2-bytes CRC checksum

©2013 Semtech Corporation

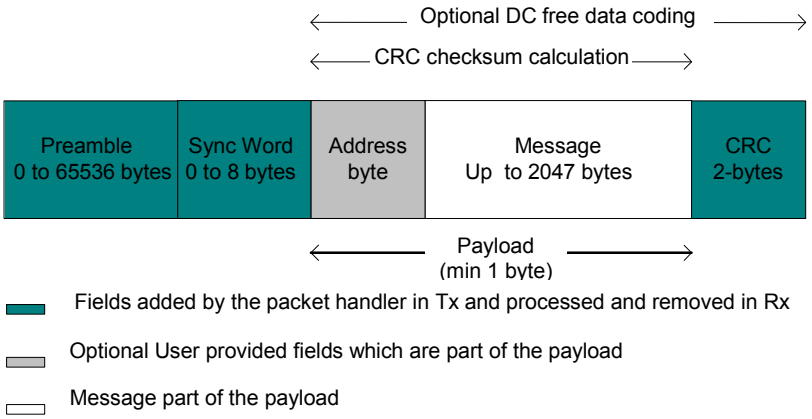

Figure 33. Fixed Length Packet Format

Variable Length Packet Format

Variable length packet format is selected when bit *PacketFormat* is set to 1.

This mode is useful in applications where the length of the packet is not known in advance and can vary over time. It is then necessary for the transmitter to send the length information together with each packet in order for the receiver to operate properly.

In this mode the length of the payload, indicated by the length byte, is given by the first byte of the FIFO and is limited to 255 bytes. Note that the length byte itself is not included in its calculation. In this mode, the payload must contain at least 2 bytes, i.e. length + address or message byte.

An illustration of a variable length packet is shown below. It contains the following fields:

- Preamble (1010...)
- Sync word (Network ID)
- Length byte
- Optional Address byte (Node ID)
- Message data

©2013 Semtech Corporation

- Optional 2-bytes CRC checksum

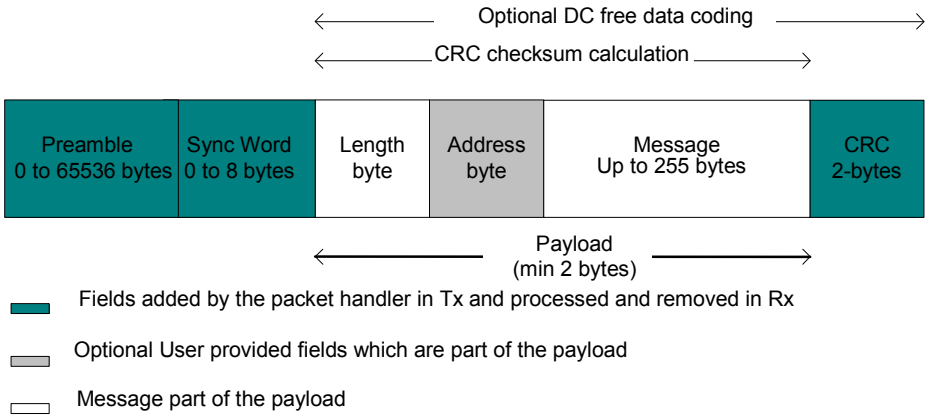

Figure 34. Variable Length Packet Format

Unlimited Length Packet Format

Unlimited length packet format is selected when bit *PacketFormat* is set to 0 and *PayloadLength* is set to 0. The user can then transmit and receive packet of arbitrary length and *PayloadLength* register is not used in Tx/Rx modes for counting the length of the bytes transmitted/received.

In Tx the data is transmitted depending on the *TxStartCondition* bit. On the Rx side the data processing features like Address filtering, Manchester encoding and data whitening are not available if the sync pattern length is set to zero (*SyncOn = 0*). The filling of the FIFO in this case can be controlled by the bit *FifoFillCondition*. The CRC detection in Rx is also not supported in this mode of the packet handler, however CRC generation in Tx is operational. The interrupts like *CrcOk* & *PayloadReady* are not available either.

An unlimited length packet shown below is made up of the following fields:

- Preamble (1010...).
- Sync word (Network ID).
- Optional Address byte (Node ID).
- Message data
- Optional 2-bytes CRC checksum (Tx only)

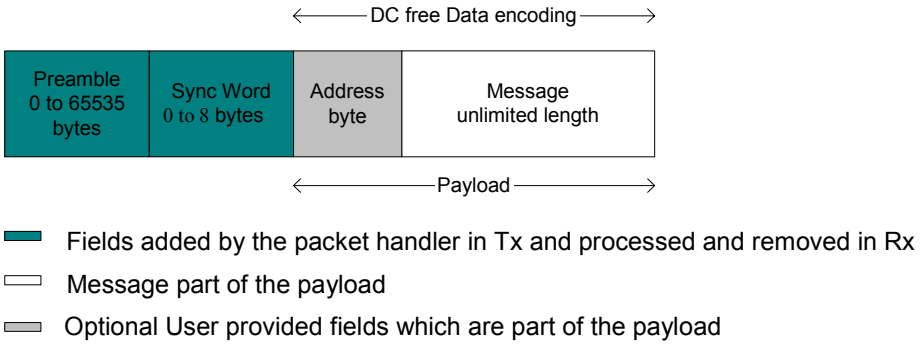

Figure 35. Unlimited Length Packet Format

©2013 Semtech Corporation

4.2.13.3. Tx Processing

In Tx mode the packet handler dynamically builds the packet by performing the following operations on the payload available in the FIFO:

- Add a programmable number of preamble bytes
- Add a programmable Sync word
- Optionally calculating CRC over complete payload field (optional length byte + optional address byte + message) and appending the 2 bytes checksum.
- Optional DC-free encoding of the data (Manchester or whitening)

Only the payload (including optional address and length fields) is required to be provided by the user in the FIFO.

The transmission of packet data is initiated by the Packet Handler only if the chip is in Tx mode and the transmission condition defined by *TxStartCondition* is fulfilled. If transmission condition is not fulfilled then the packet handler transmits a preamble sequence until the condition is met. This happens only if the preamble length /= 0, otherwise it transmits a zero or one until the condition is met to transmit the packet data.

The transmission condition itself is defined as:

- if *TxStartCondition* = 1, the packet handler waits until the first byte is written into the FIFO, then it starts sending the preamble followed by the sync word and user payload
- If *TxStartCondition* = 0, the packet handler waits until the number of bytes written in the FIFO is equal to the number defined in *RegFifoThresh* + 1
- If the condition for transmission was already fulfilled i.e. the FIFO was filled in Sleep/Stdby then the transmission of packet starts immediately on enabling Tx

4.2.13.4. Rx Processing

In Rx mode the packet handler extracts the user payload to the FIFO by performing the following operations:

- Receiving the preamble and stripping it off
- Detecting the Sync word and stripping it off
- Optional DC-free decoding of data
- Optionally checking the address byte
- Optionally checking CRC and reflecting the result on *CrcOk.*

Only the payload (including optional address and length fields) is made available in the FIFO.

When the Rx mode is enabled the demodulator receives the preamble followed by the detection of sync word. If fixed length packet format is enabled then the number of bytes received as the payload is given by the *PayloadLength* parameter.

In variable length mode the first byte received after the sync word is interpreted as the length of the received packet. The internal length counter is initialized to this received length. The *PayloadLength* register is set to a value which is greater than the maximum expected length of the received packet. If the received length is greater than the maximum length stored in *PayloadLength* register the packet is discarded otherwise the complete packet is received.

If the address check is enabled then the second byte received in case of variable length and first byte in case of fixed length is the address byte. If the address matches to the one in the *NodeAddress* field, reception of the data continues otherwise it's stopped. The CRC check is performed if *CrcOn* = 1 and the result is available in *CrcOk* indicating that the

©2013 Semtech Corporation

CRC was successful. An interrupt (*PayloadReady*) is also generated on DIO0 as soon as the payload is available in the FIFO. The payload available in the FIFO can also be read in Sleep/Standby mode.

If the CRC fails the *PayloadReady* interrupt is not generated and the FIFO is cleared. This function can be overridden by setting *CrcAutoClearOff* = 1, forcing the availability of *PayloadReady* interrupt and the payload in the FIFO even if the CRC fails.

4.2.13.5. Handling Large Packets

When *PayloadLength* exceeds FIFO size (64 bytes) whether in fixed, variable or unlimited length packet format, in addition to *PacketSent* in Tx and *PayloadReady* or *CrcOk* in Rx, the FIFO interrupts/flags can be used as described below:

- For Tx:

FIFO can be prefilled in Sleep/Standby but must be refilled “on-the-fly” during Tx with the rest of the payload.

1) Pre-fill FIFO (in Sleep/Standby first or directly in Tx mode) until *FifoThreshold* or *FifoFull* is set

2) In Tx, wait for *FifoThreshold* or *FifoEmpty* to be set (i.e. FIFO is nearly empty)

3) Write bytes into the FIFO until *FifoThreshold* or *FifoFull* is set.

4) Continue to step 2 until the entire message has been written to the FIFO (*PacketSent* will fire when the last bit of the packet has been sent).

- For Rx:

FIFO must be unfilled “on-the-fly” during Rx to prevent FIFO overrun.

1) Start reading bytes from the FIFO when *FifoEmpty* is cleared or *FifoThreshold* becomes set.

2) Suspend reading from the FIFO if *FifoEmpty* fires before all bytes of the message have been read

3) Continue to step 1 until *PayloadReady* or *CrcOk* fires

4) Read all remaining bytes from the FIFO either in Rx or Sleep/Standby mode

4.2.13.6. Packet Filtering

The SX1276/77/78 packet handler offers several mechanisms for packet filtering, ensuring that only useful packets are made available to the uC, reducing significantly system power consumption and software complexity.

Sync Word Based

Sync word filtering/recognition is used for identifying the start of the payload and also for network identification. As previously described, the Sync word recognition block is configured (size, value) in *RegSyncConfig* and *RegSyncValue(i)* registers. This information is used, both for appending Sync word in Tx, and filtering packets in Rx.

Every received packet which does not start with this locally configured Sync word is automatically discarded and no interrupt is generated.

When the Sync word is detected, payload reception automatically starts and *SyncAddressMatch* is asserted.

Note Sync Word values containing 0x00 byte(s) are forbidden

©2013 Semtech Corporation

Address Based

Address filtering can be enabled via the *AddressFiltering* bits. It adds another level of filtering, above Sync word (i.e. Sync must match first), typically useful in a multi-node networks where a network ID is shared between all nodes (Sync word) and each node has its own ID (address).

Two address based filtering options are available:

- *AddressFiltering = 01*: Received address field is compared with internal register *NodeAddress*. If they match then the packet is accepted and processed, otherwise it is discarded.
- *AddressFiltering = 10*: Received address field is compared with internal registers *NodeAddress* and *BroadcastAddress*. If either is a match, the received packet is accepted and processed, otherwise it is discarded. This additional check with a constant is useful for implementing broadcast in a multi-node networks

Please note that the received address byte, as part of the payload, is not stripped off the packet and is made available in the FIFO. In addition, *NodeAddress* and *AddressFiltering* only apply to Rx. On Tx side, if address filtering is expected, the address byte should simply be put into the FIFO like any other byte of the payload.

As address filtering requires a Sync word match, both features share the same interrupt flag *SyncAddressMatch*.

Length Based

In variable length Packet mode, *PayloadLength* must be programmed with the maximum payload length permitted. If received length byte is smaller than this maximum then the packet is accepted and processed, otherwise it is discarded.

Please note that the received length byte, as part of the payload, is not stripped off the packet and is made available in the FIFO.

To disable this function the user should set the value of the *PayloadLength* to 2047.

CRC Based

The CRC check is enabled by setting bit *CrcOn* in *RegPacketConfig1*. It is used for checking the integrity of the message.

- On Tx side a two byte CRC checksum is calculated on the payload part of the packet and appended to the end of the message
- On Rx side the checksum is calculated on the received payload and compared with the two checksum bytes received. The result of the comparison is stored in bit *CrcOk.*

By default, if the CRC check fails then the FIFO is automatically cleared and no interrupt is generated. This filtering function can be disabled via *CrcAutoClearOff* bit and in this case, even if CRC fails, the FIFO is not cleared and only *PayloadReady* interrupt goes high. Please note that in both cases, the two CRC checksum bytes are stripped off by the packet handler and only the payload is made available in the FIFO. Two CRC implementations are selected with bit *CrcWhiteningType*.

Table 76 CRC Description

Crc Type	*CrcWhiteningType*	Polynomial	Seed Value	Complemented
CCITT	0 (default)	$X^{16} + X^{12} + X^5 + 1$	0x1D0F	Yes
IBM	1	$X^{16} + X^{15} + X^2 + 1$	0xFFFF	No

A C code implementation of each CRC type is proposed in Application Section 7.

©2013 Semtech Corporation

4.2.13.7. DC-Free Data Mechanisms

The payload to be transmitted may contain long sequences of 1's and 0's, which introduces a DC bias in the transmitted signal. The radio signal thus produced has a non uniform power distribution over the occupied channel bandwidth. It also introduces data dependencies in the normal operation of the demodulator. Thus it is useful if the transmitted data is random and DC free.

For such purposes, two techniques are made available in the packet handler: Manchester encoding and data whitening.

Note Only one of the two methods can be enabled at a time.

Manchester Encoding

Manchester encoding/decoding is enabled if *DcFree = 01* and can only be used in Packet mode.

The NRZ data is converted to Manchester code by coding '1' as “10” and '0' as “01”.

In this case, the maximum chip rate is the maximum bit rate given in the specifications section and the actual bit rate is half the chip rate.

Manchester encoding and decoding is only applied to the payload and CRC checksum while preamble and Sync word are kept NRZ. However, the chip rate from preamble to CRC is the same and defined by *BitRate* in *RegBitRate* (Chip Rate = Bit Rate NRZ = 2 x Bit Rate Manchester).

Manchester encoding/decoding is thus made transparent for the user, who still provides/retrieves NRZ data to/from the FIFO.

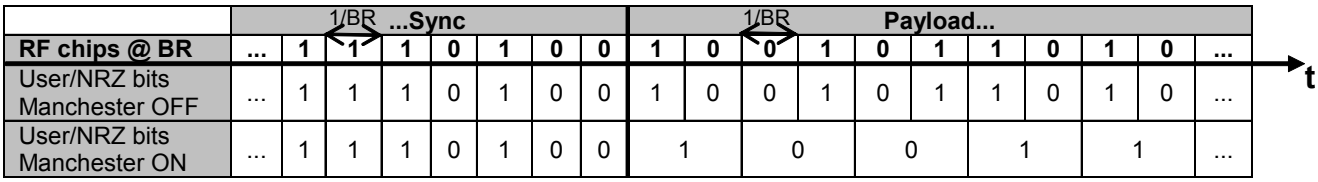

Figure 36. Manchester Encoding/Decoding

Data Whitening

Another technique called whitening or scrambling is widely used for randomizing the user data before radio transmission. The data is whitened using a random sequence on the Tx side and de-whitened on the Rx side using the same sequence. Comparing to Manchester technique it has the advantage of keeping NRZ data rate i.e. actual bit rate is not halved.

The whitening/de-whitening process is enabled if *DcFree = 10*. A 9-bit LFSR is used to generate a random sequence. The payload and 2-byte CRC checksum is then XORed with this random sequence as shown below. The data is de-whitened on the receiver side by XORing with the same random sequence.

Payload whitening/de-whitening is thus made transparent for the user, who still provides/retrieves NRZ data to/from the FIFO.

©2013 Semtech Corporation

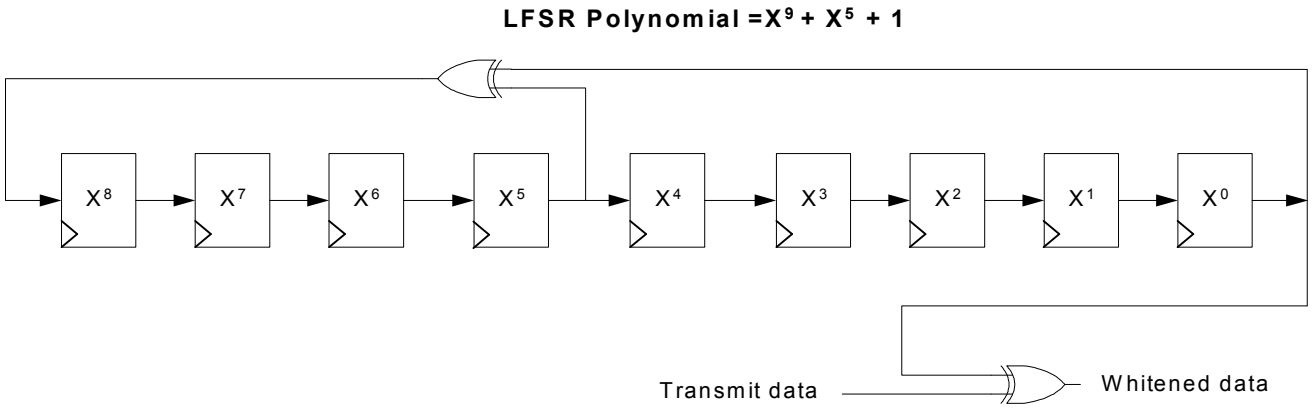

Figure 37. Data Whitening Polynomial

4.2.13.8. Beacon Tx Mode

In some short range wireless network topologies a repetitive message, also known as beacon, is transmitted periodically by a transmitter. The Beacon Tx mode allows for the re-transmission of the same packet without having to fill the FIFO multiple times with the same data.

When *BeaconOn* in *RegPacketConfig2* is set to 1, the FIFO can be filled only once in Sleep or Stdby mode with the required payload. After a first transmission, *FifoEmpty* will go high as usual, but the FIFO content will be restored when the chip exits Transmit mode. *FifoEmpty*, *FifoFull* and *FifoLevel* flags are also restored.

This feature is only available in Fixed packet format, with the Payload Length smaller than the FIFO size. The control of the chip modes (Tx-Sleep-Tx....) can either be undertaken by the microcontroller, or be automated in the Top Sequencer. See example in section 4.2.13.8.

The Beacon Tx mode is exited by setting *BeaconOn* to 0, and clearing the FIFO by setting *FifoOverrun* to 1.

4.2.14. io-homecontrol® Compatibility Mode

The SX1276/77/78 features a io-homecontrol® compatibility mode. Please contact your local Semtech representative for details on its implementation.

©2013 Semtech Corporation

4.3. SPI Interface

The SPI interface gives access to the configuration register via a synchronous full-duplex protocol corresponding to CPOL = 0 and CPHA = 0 in Motorola/Freescale nomenclature. Only the slave side is implemented.

Three access modes to the registers are provided:

- SINGLE access: an address byte followed by a data byte is sent for a write access whereas an address byte is sent and a read byte is received for the read access. The NSS pin goes low at the beginning of the frame and goes high after the data byte.
- BURST access: the address byte is followed by several data bytes. The address is automatically incremented internally between each data byte. This mode is available for both read and write accesses. The NSS pin goes low at the beginning of the frame and stay low between each byte. It goes high only after the last byte transfer.
- FIFO access: if the address byte corresponds to the address of the FIFO, then succeeding data byte will address the FIFO. The address is not automatically incremented but is memorized and does not need to be sent between each data byte. The NSS pin goes low at the beginning of the frame and stay low between each byte. It goes high only after the last byte transfer.

The figure below shows a typical SPI single access to a register.

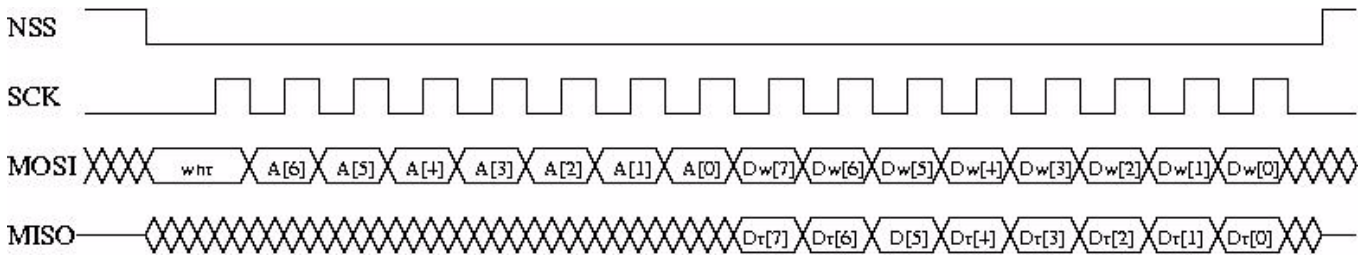

Figure 38. SPI Timing Diagram (single access)

MOSI is generated by the master on the falling edge of SCK and is sampled by the slave (i.e. this SPI interface) on the rising edge of SCK. MISO is generated by the slave on the falling edge of SCK.

A transfer is always started by the NSS pin going low. MISO is high impedance when NSS is high.

The first byte is the address byte. It is comprises:

- A wnr bit, which is 1 for write access and 0 for read access.
- Then 7 bits of address, MSB first.

The second byte is a data byte, either sent on MOSI by the master in case of a write access or received by the master on MISO in case of read access. The data byte is transmitted MSB first.

Proceeding bytes may be sent on MOSI (for write access) or received on MISO (for read access) without a rising NSS edge and re-sending the address. In FIFO mode, if the address was the FIFO address then the bytes will be written / read at the FIFO address. In Burst mode, if the address was not the FIFO address, then it is automatically incremented for each new byte received.

The frame ends when NSS goes high. The next frame must start with an address byte. The SINGLE access mode is therefore a special case of FIFO / BURST mode with only 1 data byte transferred.

During the write access, the byte transferred from the slave to the master on the MISO line is the value of the written register before the write operation.

©2013 Semtech Corporation

5. SX1276/77/78 Analog & RF Frontend Electronics

5.1. Power Supply Strategy

The SX1276/77/78 employs an internal voltage regulation scheme which provides stable operating voltage, and hence device characteristics, over the full industrial temperature and operating voltage range of operation. This includes up to +17 dBm of RF output power which is maintained from 1.8 V to 3.7 V and +20 dBm from 2.4 V to 3.7 V.

The SX1276/77/78 can be powered from any low-noise voltage source via pins VBAT_ANA, VBAT_RF and VBAT_DIG. Decoupling capacitors should be connected, as suggested in the reference design of the applications section of this document, on VR_PA, VR_DIG and VR_ANA pins to ensure correct operation of the built-in voltage regulators.

5.2. Low Battery Detector

A low battery detector is also included allowing the generation of an interrupt signal in response to the supply voltage dropping below a programmable threshold that is adjustable through the register *RegLowBat*. The interrupt signal can be mapped to any of the DIO pins by programming *RegDioMapping*.

5.3. Frequency Synthesis

5.3.1. Crystal Oscillator

The crystal oscillator is the main timing reference of the SX1276/77/78. It is used as the reference for the PLL's frequency synthesis and as the clock signal for all digital processing.

The crystal oscillator startup time, TS_OSC, depends on the electrical characteristics of the crystal reference used, for more information on the electrical specification of the crystal see Section 2.3. The crystal connects to the Pierce oscillator on pins XTA and XTB. The SX1276/77/78 optimizes the startup time and automatically triggers the PLL when the oscillator signal is stable.

Optionally, an external clock can be used to replace the crystal oscillator. This typically takes the form of a tight tolerance temperature compensated crystal oscillator (TCXO). When using an external clock source the bit *TcxoInputOn* of register *RegTcxo* should be set to 1 and the external clock has to be provided on XTA (pin 5). XTB (pin 6) should be left open.

The peak-peak amplitude of the input signal must never exceed 1.8 V. Please consult your TCXO supplier for an appropriate value of decoupling capacitor, C_D.

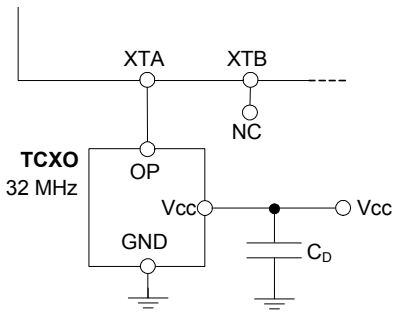

Figure 39. TCXO Connection

©2013 Semtech Corporation

5.3.2. CLKOUT Output

The reference frequency, or a fraction of it, can be provided on DIO5 (pin 13) by modifying bits *ClkOut* in *RegDioMapping2*. Two typical applications of the CLKOUT output include:

- To provide a clock output for a companion processor, thus saving the cost of an additional oscillator. CLKOUT can be made available in any operation mode except Sleep mode and is automatically enabled at power on reset.
- To provide an oscillator reference output. Measurement of the CLKOUT signal enables simple software trimming of the initial crystal tolerance.

Note *To minimize the current consumption of the SX1276/77/78, please ensure that the CLKOUT signal is disabled when not required.*

5.3.3. PLL

The local oscillator of the SX1276/77/78 is derived from two almost identical fractional-N PLLs that are referenced to the crystal oscillator circuit. Both PLLs feature a programmable bandwidth setting where one of four discrete preset bandwidths may be accessed.

The SX1276/77/78 PLL uses a 19-bit sigma-delta modulator whose frequency resolution, constant over the whole frequency range, is given by:

$$F_{STEP} = \frac{F_{XOSC}}{2^{19}}$$

The carrier frequency is programmed through *RegFrf*, split across addresses 0x06 to 0x08:

$$F_{RF} = F_{STEP} \times Frf(23,0)$$

Note *The Frf setting is split across 3 bytes. A change in the center frequency will only be taken into account when the least significant byte FrfLsb in RegFrfLsb is written. This allows the potential for user generation of m-ary FSK at very low bit rates. This is possible where frequency modulation is achieved by direct programming of the programmed RF centre frequency. To enable this functionality set the FastHopOn bit of register RegPllHop.*

5.3.4. RC Oscillator

All timing operations in the low-power Sleep state of the Top Level Sequencer rely on the accuracy of the internal low-power RC oscillator. This oscillator is automatically calibrated at the device power-up not requiring any user input.

©2013 Semtech Corporation

5.4. Transmitter Description

The transmitter of SX1276/77/78 comprises the frequency synthesizer, modulator (both LoRa™ and FSK/OOK) and power amplifier blocks, together with the DC biasing and ramping functionality that is provided through the VR_PA block.

5.4.1. Architecture Description

The architecture of the RF front end is shown in the following diagram.

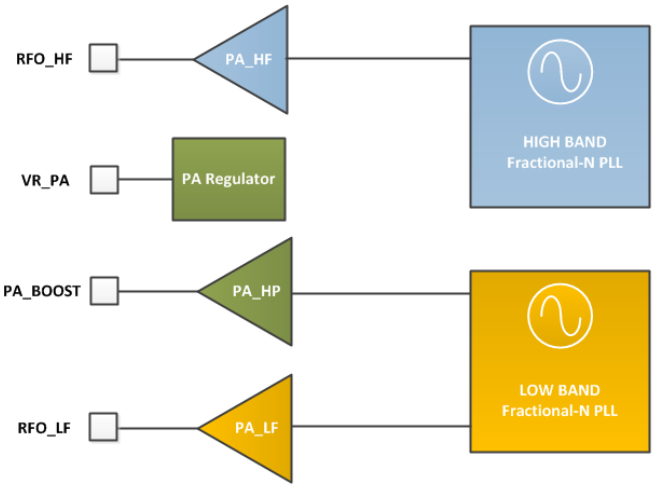

Figure 40. RF Front-end Architecture Shows the Internal PA Configuration.

5.4.2. RF Power Amplifiers

PA_HF and PA_LF are high efficiency amplifiers capable of yielding RF power programmable in 1 dB steps from -4 to +14dBm directly into a 50 ohm load with low current consumption. PA_LF covers the lower bands (up to 525 MHz), whilst PA_HF will cover the upper bands (from 860 MHz). The output power is sensitive to the power supply voltage, and typically their performance is expressed at 3.3V.

PA_HP (High Power), connected to the PA_BOOST pin, covers all frequency bands that the chip addresses. It permits continuous operation at up to +17 dBm and duty cycled operation at up to +20dBm. For full details of operation at +20dBm please consult Section 5.4.3

Table 77 Power Amplifier Mode Selection Truth Table

PaSelect	Mode	Power Range	Pout Formula
0	PA_HF or PA_LF on RFO_HF or RFO_LF	-4 to +15dBm	Pout=Pmax-(15-OutputPower) Pmax=10.8+0.6*MaxPower [dBm]
1	PA_HP on PA_BOOST, any frequency	+2 to +17dBm	Pout=17-(15-OutputPower) [dBm]

Notes - For +20 dBm restrictions on operation please consult the following section.

- To ensure correct operation at the highest power levels ensure that the current limiter OcpTrim is adjusted to permit delivery of the requisite supply current.

- If the PA_BOOST pin is not used it may be left floating.

©2013 Semtech Corporation

5.4.3. High Power +20 dBm Operation

The SX1276/77/78 have a high power +20 dBm capability on PA_BOOST pin, with the following settings:

Table 78 High Power Settings

Register	*Address*	*Value for High Power*	*Default value PA_HF/LF or +17dBm*	Description
RegPaDac	0x4d	0x87	0x84	Set Pmax to +20dBm for PA_HP

Notes - High Power settings must be turned off when using PA_LF or PA_HF

- The Over Current Protection limit should be adapted to the actual power level, in RegOcp

Specific Absolute Maximum Ratings and Operating Range restrictions apply to the +20 dBm operation. They are listed in Table 79 and Table 80.

Table 79 Operating Range, +20dBm Operation

Symbol	Description	Min	Max	Unit
DC_20dBm	Duty Cycle of transmission at +20 dBm output	-	1	%
VSWR_20dBm	Maximum VSWR at antenna port, +20 dBm output	-	3:1	-

Table 80 Operating Range, +20dBm Operation

Symbol	Description	Min	Max	Unit
VDDop_20dBm	Supply voltage, +20 dBm output	2.4	3.7	V

The duty cycle of transmission at +20 dBm is limited to 1%, with a maximum VSWR of 3:1 at antenna port, over the standard operating range [-40;+85°C]. For any other operating condition, contact your Semtech representative.

©2013 Semtech Corporation

5.4.4. Over Current Protection

The power amplifiers of SX1276/77/78 are protected against current over supply in adverse RF load conditions by the over current protection block. This has the added benefit of protecting battery chemistries with limited peak current capability and minimising worst case PA consumption in battery life calculation. The current limiter value is controlled by the *OcpTrim* bits in *RegOcp*, and is calculated according to the following formulae:

Table 81 Trimming of the OCP Current

OcpTrim	I_{MAX}	Imax Formula
0 to 15	45 to 120 mA	45 + 5**OcpTrim* [mA]
16 to 27	130 to 240 mA	-30 + 10**OcpTrim* [mA]
27+	240 mA	*240 mA*

Note Imax sets a limit on the current drain of the Power Amplifier only, hence the maximum current drain of the SX1276/77/78 *is equal to Imax +* I_{FS}.

5.5. Receiver Description

5.5.1. Overview

The SX1276/77/78 features a digital receiver with the analog to digital conversion process being performed directly following the LNA-Mixers block. In addition to the LoRa™ modulation scheme the low-IF receiver is able to demodulate ASK, OOK, (G)FSK and (G)MSK modulation. All filtering, demodulation, gain control, synchronization and packet handling is performed digitally allowing a high degree of programmable flexibility. The receiver also has automatic gain calibration, this improves the precision of RSSI measurement and enhances image rejection.

5.5.2. Receiver Enabled and Receiver Active States

In the receiver operating mode two states of functionality are defined. Upon initial transition to receiver operating mode the receiver is in the 'receiver-enabled' state. In this state the receiver awaits for either the user defined valid preamble or RSSI detection criterion to be fulfilled. Once met the receiver enters 'receiver-active' state. In this second state the received signal is processed by the packet engine and top level sequencer. For a complete description of the digital functions of the SX1276/77/78 receiver please see Section 4 of the datasheet.

5.5.3. Automatic Gain Control In FSK/OOK Mode

The AGC feature allows receiver to handle a wide Rx input dynamic range from the sensitivity level up to maximum input level of 0dBm or more, whilst optimizing the system linearity.

The following table shows typical NF and IIP3 performances for the SX1276/77/78 LNA gains available.

©2013 Semtech Corporation

Table 82 LNA Gain Control and Performances

RX input level (Pin)	*Gain Setting*	*LnaGain*	*Relative LNA Gain [dB]*	NF Lower/Higher band [dB]	IIP3 Lower/Higher band [dBm]
Pin <= AgcThresh1	G1	'001'	0 dB	5/7	-22/-12
AgcThresh1 < Pin <= AgcThresh2	G2	'010'	-6 dB	9/11	-15/-8
AgcThresh2 < Pin <= AgcThresh3	G3	'011'	-12 dB	TBC	
AgcThresh3 < Pin <= AgcThresh4	G4	'100'	-24 dB		
AgcThresh4 < Pin <= AgcThresh5	G5	'110'	-26 dB		
AgcThresh5 < Pin	G6	'111'	-48 dB		

5.5.4. RSSI in FSK/OOK Mode

The RSSI provides a measure of the incoming signal power at RF input port, measured within the receiver bandwidth. The signal power is available in *RssiValue*. This value is absolute in units of dBm and with a resolution of 0.5 dB. The formula below relates the register value to the absolute input signal level at the RF input port:

$$RssiValue = -2 \cdot RF\ level\left[dBm\right] + RssiOffset\ \left[dB\right]$$

The RSSI value can be compensated to take into account the loss in the matching network or even the gain of an additional LNA by using *RssiOffset*. The offset can be chosen in 1 dB steps from -16 to +15 dB. When compensation is applied, the effective signal strength is read as follows:

$$RSSI\left[dBm\right] = -\frac{RssiValue}{2}$$

The RSSI value is smoothed on a user defined number of measured RSSI samples. The precision of the RSSI value is related to the number of RSSI samples used. *RssiSmoothing* selects the number of RSSI samples from a minimum of 2 samples up to 256 samples in increments of power of 2. Table 83 gives the estimation of the RSSI accuracy for a 10 dB SNR and response time versus the number of RSSI samples programmed in *RssiSmoothing*.

©2013 Semtech Corporation

Table 83 RssiSmoothing Options

RssiSmoothing	Number of Samples	Estimated Accuracy	Response Time
'000'	2	± 6 dB	$\frac{2^{(RssiSmoothing+1)}}{4 \cdot RxBw[kHz]}[ms]$
'001'	4	± 5 dB	
'010'	8	± 4 dB	
'011'	16	± 3 dB	
'100'	32	± 2 dB	
'101'	64	± 1.5 dB	
'110'	128	± 1.2 dB	
'111'	256	± 1.1 dB	

The RSSI is calibrated when the image and RSSI calibration process is launched.

5.5.5. RSSI in LoRa™ Mode

The RSSI values reported by the LoRa™ modem differ from those expressed by the FSK/OOK modem. The following formula shows the method used to interpret the LoRa™ RSSI values.

$$RSSI[dBm] = -137 + RSSI$$

5.5.6. Channel Filter

The role of the channel filter is to reject noise and interference outside of the wanted channel. The SX1276/77/78 channel filtering is implemented with a 16-tap finite impulse response (FIR) filter. Rejection of the filter is high enough that the filter stop-band performance is not the dominant influence on adjacent channel rejection performance. This is instead limited by the SX1276/77/78 PLL phase noise.

Note To respect sampling criterion in the decimation chain of the receiver, the communication bit rate cannot be set at a higher than twice the single side receiver bandwidth (BitRate < 2 x RxBw)

The programmed single side bandwidth *RxBw* of the channel filter is determined by the parameters *RxBwMant* and *RxBwExp* in *RegRxBw:*

$$RxBw = \frac{FXOSC}{RxBwMant \times 2^{RxBwExp+2}}$$

The following channel filter bandwidths are hence accessible in the case of a 32 MHz reference oscillator.

Table 84 Available RxBw Settings

RxBwMant (binary/value)	*RxBwExp* (decimal)	*RxBw (kHz)* FSK / OOK
10b / 24	7	2.6
01b / 20	7	3.1
00b / 16	7	3.9
10b / 24	6	5.2

©2013 Semtech Corporation

01b / 20	6	6.3
00b / 16	6	7.8
10b / 24	5	10.4
01b / 20	5	12.5
00b / 16	5	15.6
10b / 24	4	20.8
01b / 20	4	25.0
00b / 16	4	31.3
10b / 24	3	41.7
01b / 20	3	50.0
00b / 16	3	62.5
10b / 24	2	83.3
01b / 20	2	100.0
00b / 16	2	125.0
10b / 24	1	166.7
01b / 20	1	200.0
00b / 16	1	250.0
Other settings		reserved

5.5.7. Temperature Measurement

A stand alone temperature measurement block is used in order to measure the temperature in any mode except Sleep and Standby. It is enabled by default, and can be stopped by setting *TempMonitorOff* to 1. The result of the measurement is stored in *TempValue* in *RegTemp*.

Due to process variations, the absolute accuracy of the result is +/- 10 °C. Higher precision requires a calibration procedure at a known temperature. The figure below shows the influence of just such a calibration process. For more information, including source code, please consult the applications Section of this document.

Example temperature curve, typical device

		Correction Factor	15
Actual Temp [Celsius]	RegTemp [Dec]	Temp before calibration [°C]	Temp after calibration [°C]
85	181	74	89
75	190	65	80
65	201	54	69
55	211	44	59
45	222	33	48
35	232	23	38
25	245	10	25
15	0	0	15
5	10	-10	5
-5	21	-21	-6
-15	33	-33	-18
-25	44	-44	-29
-35	56	-56	-41
-40	63	-63	-48

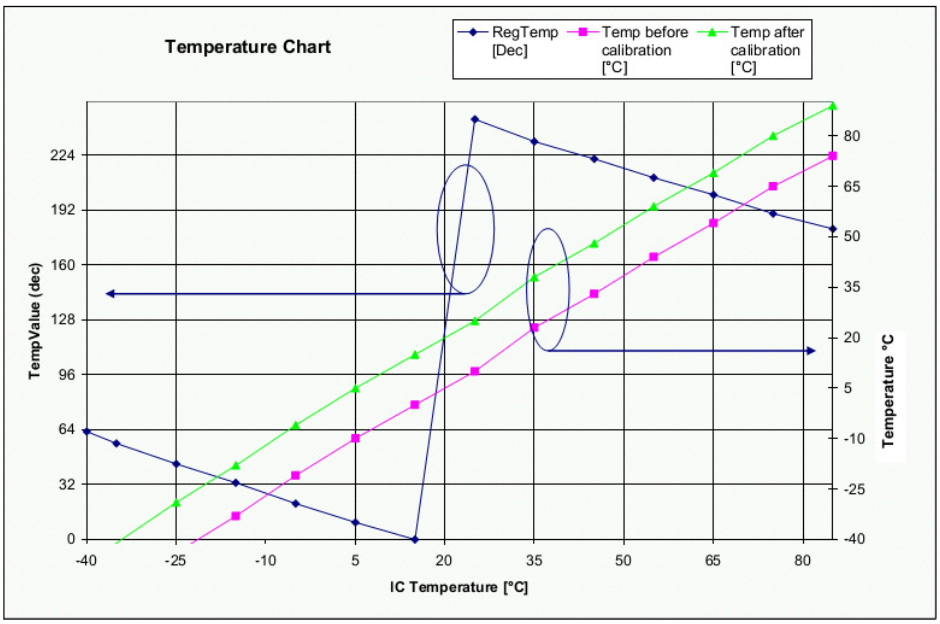

Figure 41. Temperature Sensor Response

©2013 Semtech Corporation

6. Description of the Registers

The register mapping depends upon whether FSK/OOK or LoRa™ mode has been selected. The following table summarises the location and function of each register and gives an overview of the changes in register mapping between both modes of operation.

6.1. Register Table Summary

Table 85 Registers Summary

Address	Register Name		Reset (POR)	Default (FSK)	Description	
	FSK/OOK Mode	LoRa™ Mode			FSK Mode	LoRa™ Mode
0x00	RegFifo		0x00		FIFO read/write access	
0x01	RegOpMode		0x01		Operating mode & LoRa™ / FSK selection	
0x02	RegBitrateMsb	Unused	0x1A		Bit Rate setting, Most Significant Bits	
0x03	RegBitrateLsb		0x0B		Bit Rate setting, Least Significant Bits	
0x04	RegFdevMsb		0x00		Frequency Deviation setting, Most Significant Bits	
0x05	RegFdevLsb		0x52		Frequency Deviation setting, Least Significant Bits	
0x06	RegFrfMsb		0xE4		RF Carrier Frequency, Most Significant Bits	
0x07	RegFrfMid		0xC0		RF Carrier Frequency, Intermediate Bits	
0x08	RegFrfLsb		0x00		RF Carrier Frequency, Least Significant Bits	
0x09	RegPaConfig		0x0F		PA selection and Output Power control	
0x0A	RegPaRamp		0x19		Control of PA ramp time, low phase noise PLL	
0x0B	RegOcp		0x2B		Over Current Protection control	
0x0C	RegLna		0x20		LNA settings	
0x0D	RegRxConfig	RegFifoAddrPtr	0x08	0x0E	AFC, AGC, ctrl	FIFO SPI pointer
0x0E	RegRssiConfig	RegFifoTxBaseAddr	0x02		RSSI	Start Tx data
0x0F	RegRssiCollision	RegFifoRxBaseAddr	0x0A		RSSI Collision detector	Start Rx data
0x10	RegRssiThresh	RegIrqFlags	0xFF		RSSI Threshold control	LoRa™ state flags
0x11	RegRssiValue	RegIrqFlagsMask	-		RSSI value in dBm	Optional flag mask
0x12	RegRxBw	RegFreqIfMsb	0x15		Channel Filter BW Control	IF Frequency
0x13	RegAfcBw	RegFreqIFLsb	0x0B		AFC Channel Filter BW	
0x14	RegOokPeak	RegSymbTimeoutMsb	0x28		OOK demodulator	Receiver timeout value
0x15	RegOokFix	RegSymbTimeoutLsb	0x0C		Threshold of the OOK demod	
0x16	RegOokAvg	RegTxCfg	0x12		Average of the OOK demod	LoRa™ transmit parameters
0x17	Reserved17	RegPayloadLength	0x47		-	
0x18	Reserved18	RegPreambleMsb	0x32		-	Size of preamble
0x19	Reserved19	RegPreambleLsb	0x3E		-	
0x1A	RegAfcFei	RegModulationCfg	0x00		AFC and FEI control	Modem PHY config
0x1B	RegAfcMsb	RegRfMode	0x00		Frequency correction value of the AFC	Test register
0x1C	RegAfcLsb	RegHopPeriod	0x00			FHSS Hop period

©2013 Semtech Corporation

Address	Register Name		Reset (POR)	Default (FSK)	Description	
	FSK/OOK Mode	LoRa™ Mode			FSK Mode	LoRa™ Mode
0x1D	RegFeiMsb	RegNbRxBytes	0x00		Value of the calculated frequency error	Number of received bytes
0x1E	RegFeiLsb	RegRxHeaderInfo	0x00			Info from last header
0x1F	RegPreambleDetect	RegRxHeaderCntValue	0x40	0xAA	Settings of the Preamble Detector	Number of valid headers received
0x20	RegRxTimeout1	RegRxPacketCntValue	0x00		Timeout Rx request and RSSI	Number of valid packets received
0x21	RegRxTimeout2	RegModemStat	0x00		Timeout RSSI and *PayloadReady*	Live LoRa™ modem status
0x22	RegRxTimeout3	RegPktSnrValue	0x00		Timeout RSSI and *SyncAddress*	Espimation of last packet SNR
0x23	RegRxDelay	RegRssiValue	0x00		Delay between Rx cycles	Current RSSI
0x24	RegOsc	RegPktRssiValue	0x05	0x07	RC Oscillators Settings, CLKOUT frequency	RSSi of last packet
0x25	RegPreambleMsb	RegHopChannel	0x00		Preamble length, MSB	FHSS start channel
0x26	RegPreambleLsb	RegRxDataAddr	0x03		Preamble length, LSB	LoRa™ rx data pointer
0x27	RegSyncConfig	RESERVED	0x93		Sync Word Recognition control	RESERVED
0x28-0x2F	RegSyncValue1-8		0x55	0x01	Sync Word bytes, 1 through 8	
0x30	RegPacketConfig1		0x90		Packet mode settings	
0x31	RegPacketConfig2		0x40		Packet mode settings	
0x32	RegPayloadLength		0x40		Payload length setting	
0x33	RegNodeAdrs	RESERVED	0x00		Node address	RESERVED
0x34	RegBroadcastAdrs		0x00		Broadcast address	
0x35	RegFifoThresh		0x0F	0x8F	Fifo threshold, Tx start condition	
0x36	RegSeqConfig1		0x00		Top level Sequencer settings	
0x37	RegSeqConfig2		0x00		Top level Sequencer settings	
0x38	RegTimerResol		0x00		Timer 1 and 2 resolution control	
0x39	RegTimer1Coef		0xF5		Timer 1 setting	
0x3A	RegTimer2Coef		0x20		Timer 2 setting	
0x3B	RegImageCal		0x82	0x02	Image calibration engine control	
0x3C	RegTemp		-		Temperature Sensor value	
0x3D	RegLowBat		0x02		Low Battery Indicator Settings	
0x3E	RegIrqFlags1		0x80		Status register: PLL Lock state, Timeout, RSSI	
0x3F	RegIrqFlags2		0x40		Status register: FIFO handling flags, Low Battery	
0x40	RegDioMapping1		0x00		Mapping of pins DIO0 to DIO3	
0x41	RegDioMapping2		0x00		Mapping of pins DIO4 and DIO5, ClkOut frequency	
0x42	RegVersion		0x11		Semtech ID relating the silicon revision	
0x44	RegPllHop	Unused	0x2D		Control the fast frequency hopping mode	Unused
0x4B	RegTcxo		0x09		TCXO or XTAL input setting	

©2013 Semtech Corporation

Address	Register Name		Reset (POR)	Default (FSK)	Description	
	FSK/OOK Mode	LoRa™ Mode			FSK Mode	LoRa™ Mode
0x4D	RegPaDac		0x84		Higher power settings of the PA	
0x5B	RegFormerTemp		-		Stored temperature during the former IQ Calibration	
0x5D	RegBitRateFrac	Unused	0x00		Fractional part in the Bit Rate division ratio	Unused
0x61	RegAgcRef		0x13		Adjustment of the AGC thresholds	
0x62	RegAgcThresh1		0x0E			
0x63	RegAgcThresh2		0x5B			
0x64	RegAgcThresh3		0xDB			
others	RegTest		-		Internal test registers. Do not overwrite	

Note - Reset values are automatically refreshed in the chip at Power On Reset

- Default values are the Semtech recommended register values, optimizing the device operation

*- Registers for which the Default value differs from the Reset value are denoted by a * in the tables of section 6.2*

©2013 Semtech Corporation

6.2. FSK/OOK Mode Register Map

This section details the SX1276/77/78 register mapping and the precise contents of each register in FSK/OOK mode.

Convention: r: read, w: write, t:trigger, c: clear

Table 86 Register Map

Name (Address)	Bits	Variable Name	Mode	Default value	FSK/OOK Description
RegFifo (0x00)	7-0	Fifo	rw	0x00	FIFO data input/output
Registers for Common settings					
RegOpMode (0x01)	7	LongRangeMode	r	0x00	0 → FSK/OOK Mode 1→ LoRa™ Mode This bit can be modified only in Sleep mode. A write operation on other device modes is ignored.
	6-5	ModulationType	rw	0x00	Modulation scheme: 00 → FSK 01 → OOK 10 → 11 → reserved
	4	reserved	r	0x0	reserved
	3	LowFrequencyModeOn	rw	0x01	Access Low Frequency Mode registers (from address 0x61 on) 0 → High Frequency Mode (access to HF test registers) 1 → Low Frequency Mode (access to LF test registers)
	2-0	Mode	rw	0x01	Transceiver modes 000 → Sleep mode 001 → Stdby mode 010 → FS mode TX (FSTx) 011 → Transmitter mode (Tx) 100 → FS mode RX (FSRx) 101 → Receiver mode (Rx) 110 → reserved 111 → reserved
RegBitrateMsb (0x02)	7-0	BitRate(15:8)	rw	0x1a	MSB of Bit Rate (chip rate if Manchester encoding is enabled)
RegBitrateLsb (0x03)	7-0	BitRate(7:0)	rw	0x0b	LSB of bit rate (chip rate if Manchester encoding is enabled) $BitRate = \frac{FXOSC}{BitRate(15,0) + \frac{BitrateFrac}{16}}$ Default value: 4.8 kb/s
RegFdevMsb (0x04)	7-6	reserved	rw	0x00	reserved
	5-0	Fdev(13:8)	rw	0x00	MSB of the frequency deviation
RegFdevLsb (0x05)	7-0	Fdev(7:0)	rw	0x52	LSB of the frequency deviation $Fdev = Fstep \times Fdev(15,0)$ Default value: 5 kHz

©2013 Semtech Corporation

Name (Address)	Bits	Variable Name	Mode	Default value	FSK/OOK Description
RegFrfMsb (0x06)	7-0	Frf(23:16)	rw	0x6c	MSB of the RF carrier frequency
RegFrfMid (0x07)	7-0	Frf(15:8)	rw	0x80	MSB of the RF carrier frequency
RegFrfLsb (0x08)	7-0	Frf(7:0)	rw	0x00	LSB of RF carrier frequency $Frf = Fstep \times Frf(23;0)$ Default value: 434.000 MHz The RF frequency is taken into account internally only when: - entering FSRX/FSTX modes - re-starting the receiver
Registers for the Transmitter					
RegPaConfig (0x09)	7	PaSelect	rw	0x00	Selects PA output pin 0 → RFO pin. Maximum power of +14 dBm 1 → PA_BOOST pin. Maximum power of +20 dBm
	6-4	MaxPower	rw	0x04	Select max output power: Pmax=10.8+0.6*MaxPower [dBm]
	3-0	OutputPower	rw	0x0f	Pout=Pmax-(15-OutputPower) if PaSelect = 0 (RFO pins) Pout=17-(15-OutputPower) if PaSelect = 1 (PA_BOOST pin)
RegPaRamp (0x0A)	7	unused	r	0x00	unused
	6-5	ModulationShaping	rw	0x00	Data shaping: In FSK: 00 → no shaping 01 → gaussian filter BT = 1.0 10 → gaussian filter BT = 0.5 11 → gaussian filter BT = 0.3 In OOK: 00 → no shaping 01 → filtering with fcutoff = bit_rate 10 → filtering with fcutoff = 2*bit_rate (for bit_rate < 125 kb/s) 11 → reserved
	4	reserved	rw	0x00	reserved
	3-0	PaRamp	rw	0x09	Rise/Fall time of ramp up/down in FSK 0000 → 3.4 ms 0001 → 2 ms 0010 → 1 ms 0011 → 500 us 0100 → 250 us 0101 → 125 us 0110 → 100 us 0111 → 62 us 1000 → 50 us 1001 → 40 us (d) 1010 → 31 us 1011 → 25 us 1100 → 20 us 1101 → 15 us 1110 → 12 us 1111 → 10 us

©2013 Semtech Corporation

Name (Address)	Bits	Variable Name	Mode	Default value	FSK/OOK Description
RegOcp (0x0B)	7-6	unused	r	0x00	unused
	5	OcpOn	rw	0x01	Enables overload current protection (OCP) for the PA: 0 → OCP disabled 1 → OCP enabled
	4-0	OcpTrim	rw	0x0b	Trimming of OCP current: I_{max} = 45+5*OcpTrim [mA] if OcpTrim <= 15 (120 mA) / I_{max} = -30+10*OcpTrim [mA] if 15 < OcpTrim <= 27 (130 to 240 mA) I_{max} = 240mA for higher settings Default I_{max} = 100mA
Registers for the Receiver					
RegLna (0x0C)	7-5	LnaGain	rw	0x01	LNA gain setting: 000 → reserved 001 → G1 = highest gain 010 → G2 = highest gain – 6 dB 011 → G3 = highest gain – 12 dB 100 → G4 = highest gain – 24 dB 101 → G5 = highest gain – 36 dB 110 → G6 = highest gain – 48 dB 111 → reserved Note: Reading this address always returns the current LNA gain (which may be different from what had been previously selected if AGC is enabled.
	4-3	LnaBoostLf	rw	0x00	Low Frequency (RFI_LF) LNA current adjustment 00 → Default LNA current Other → Reserved
	2	reserved	rw	0x00	reserved
	1-0	LnaBoostHf	rw	0x00	High Frequency (RFI_HF) LNA current adjustment 00 → Default LNA current 11 → Boost on, 150% LNA current

©2013 Semtech Corporation

Name (Address)	Bits	Variable Name	Mode	Default value	FSK/OOK Description
RegRxConfig (0x0d)	7	RestartRxOnCollision	rw	0x00	Turns on the mechanism restarting the receiver automatically if it gets saturated or a packet collision is detected 0 → No automatic Restart 1 → Automatic restart On
	6	RestartRxWithoutPllLock	wt	0x00	Triggers a manual Restart of the Receiver chain when set to 1. Use this bit when there is no frequency change, RestartRxWithPllLock otherwise.
	5	RestartRxWithPllLock	wt	0x00	Triggers a manual Restart of the Receiver chain when set to 1. Use this bit when there is a frequency change, requiring some time for the PLL to re-lock.
	4	AfcAutoOn	rw	0x00	0 → No AFC performed at receiver startup 1 → AFC is performed at each receiver startup
	3	AgcAutoOn	rw	0x01	0 → LNA gain forced by the LnaGain Setting 1 → LNA gain is controlled by the AGC
	2-0	RxTrigger	rw	0x06 *	Selects the event triggering AGC and/or AFC at receiver startup. See Table 18 for a description.
RegRssiConfig (0x0e)	7-3	RssiOffset	rw	0x00	Signed RSSI offset, to compensate for the possible losses/gains in the front-end (LNA, SAW filter...) 1dB / LSB, 2's complement format
	2-0	RssiSmoothing	rw	0x02	Defines the number of samples taken to average the RSSI result: 000 → 2 samples used 001 → 4 samples used 010 → 8 samples used 011 → 16 samples used 100 → 32 samples used 101 → 64 samples used 110 → 128 samples used 111 → 256 samples used
RegRssiCollision (0x0f)	7-0	RssiCollisionThreshold	rw	0x0a	Sets the threshold used to consider that an interferer is detected, witnessing a packet collision. 1dB/LSB (only RSSI increase) Default: 10dB
RegRssiThresh (0x10)	7-0	RssiThreshold	rw	0xff	RSSI trigger level for the Rssi interrupt: - RssiThreshold / 2 [dBm]
RegRssiValue (0x11)	7-0	RssiValue	r	-	Absolute value of the RSSI in dBm, 0.5dB steps. RSSI = - RssiValue/2 [dBm]
RegRxBw (0x12)	7	unused	r	-	unused
	6-5	reserved	rw	0x00	reserved
	4-3	RxBwMant	rw	0x02	Channel filter bandwidth control: 00 → RxBwMant = 16 10 → RxBwMant = 24 01 → RxBwMant = 20 11 → reserved
	2-0	RxBwExp	rw	0x05	Channel filter bandwidth control: FSK Mode: $RxBw = \frac{FXOSC}{RxBwMant \times 2^{RxBwExp+2}}$

©2013 Semtech Corporation

Name (Address)	Bits	Variable Name	Mode	Default value	FSK/OOK Description
RegAfcBw (0x13)	7-5	reserved	rw	0x00	reserved
	4-3	RxBwMantAfc	rw	0x01	RxBwMant parameter used during the AFC
	2-0	RxBwExpAfc	rw	0x03	RxBwExp parameter used during the AFC
RegOokPeak (0x14)	7-6	reserved	rw	0x00	reserved
	5	BitSyncOn	rw	0x01	Enables the Bit Synchronizer. 0 → Bit Sync disabled (not possible in Packet mode) 1 → Bit Sync enabled
	4-3	OokThreshType	rw	0x01	Selects the type of threshold in the OOK data slicer: 00 → fixed threshold 10 → average mode 01 → peak mode (default) 11 → reserved
	2-0	OokPeakTheshStep	rw	0x00	Size of each decrement of the RSSI threshold in the OOK demodulator: 000 → 0.5 dB 001 → 1.0 dB 010 → 1.5 dB 011 → 2.0 dB 100 → 3.0 dB 101 → 4.0 dB 110 → 5.0 dB 111 → 6.0 dB
RegOokFix (0x15)	7-0	OokFixedThreshold	rw	0x0C	Fixed threshold for the Data Slicer in OOK mode Floor threshold for the Data Slicer in OOK when Peak mode is used
RegOokAvg (0x16)	7-5	OokPeakThreshDec	rw	0x00	Period of decrement of the RSSI threshold in the OOK demodulator: 000 → once per chip 001 → once every 2 chips 010 → once every 4 chips 011 → once every 8 chips 100 → twice in each chip 101 → 4 times in each chip 110 → 8 times in each chip 111 → 16 times in each chip
	4	reserved	rw	0x01	reserved
	3-2	OokAverageOffset	rw	0x00	Static offset added to the threshold in average mode in order to reduce glitching activity (OOK only): 00 → 0.0 dB 10 → 4.0 dB 01 → 2.0 dB 11 → 6.0 dB
	1-0	OokAverageThreshFilt	rw	0x02	Filter coefficients in average mode of the OOK demodulator: 00 → f_C ≈ chip rate / 32.π 01 → f_C ≈ chip rate / 8.π 10 → f_C ≈ chip rate / 4.π 11 → f_C ≈ chip rate / 2.π
RegRes17 to RegRes19	7-0	reserved	rw	0x47 0x32 0x3E	reserved. Keep the Reset values.

©2013 Semtech Corporation

Name (Address)	Bits	Variable Name	Mode	Default value	FSK/OOK Description
RegAfcFei (0x1a)	7-5	unused	r	-	unused
	4	AgcStart	wt	0x00	Triggers an AGC sequence when set to 1.
	3	reserved	rw	0x00	reserved
	2	unused	-	-	unused
	1	AfcClear	wc	0x00	Clear AFC register set in Rx mode. Always reads 0.
	0	AfcAutoClearOn	rw	0x00	Only valid if AfcAutoOn is set 0 → AFC register is not cleared at the beginning of the automatic AFC phase 1 → AFC register is cleared at the beginning of the automatic AFC phase
RegAfcMsb (0x1b)	7-0	AfcValue(15:8)	rw	0x00	MSB of the AfcValue, 2's complement format. Can be used to overwrite the current AFC value
RegAfcLsb (0x1c)	7-0	AfcValue(7:0)	rw	0x00	LSB of the AfcValue, 2's complement format. Can be used to overwrite the current AFC value
RegFeiMsb (0x1d)	7-0	FeiValue(15:8)	rw	-	MSB of the measured frequency offset, 2's complement. Must be read before RegFeiLsb.
RegFeiLsb (0x1e)	7-0	FeiValue(7:0)	rw	-	LSB of the measured frequency offset, 2's complement *Frequency error* = FeiValue x Fstep
RegPreambleDetect (0x1f)	7	PreambleDetectorOn	rw	0x01 *	Enables Preamble detector when set to 1. The AGC settings supersede this bit during the startup / AGC phase. 0 → Turned off 1 → Turned on
	6-5	PreambleDetectorSize	rw	0x01 *	Number of Preamble bytes to detect to trigger an interrupt 00 → 1 byte 10 → 3 bytes 01 → 2 bytes 11 → Reserved
	4-0	PreambleDetectorTol	rw	0x0A *	Number or chip errors tolerated over PreambleDetectorSize. 4 chips per bit.
RegRxTimeout1 (0x20)	7-0	TimeoutRxRssi	rw	0x00	*Timeout* interrupt is generated *TimeoutRxRssi**16*T_{bit} after switching to Rx mode if *Rssi* interrupt doesn't occur (i.e. *RssiValue* > *RssiThreshold)* 0x00: *TimeoutRxRssi* is disabled
RegRxTimeout2 (0x21)	7-0	TimeoutRxPreamble	rw	0x00	*Timeout* interrupt is generated *TimeoutRxPreamble**16*T_{bit} after switching to Rx mode if *Preamble* interrupt doesn't occur 0x00: *TimeoutRxPreamble* is disabled
RegRxTimeout3 (0x22)	7-0	TimeoutSignalSync	rw	0x00	*Timeout* interrupt is generated *TimeoutSignalSync**16*T_{bit} after the Rx mode is programmed, if *SyncAddress* doesn't occur 0x00: *TimeoutSignalSync* is disabled
RegRxDelay (0x23)	7-0	InterPacketRxDelay	rw	0x00	Additional delay before an automatic receiver restart is launched: Delay = InterPacketRxDelay*4*Tbit
RC Oscillator registers					

©2013 Semtech Corporation

Name (Address)	Bits	Variable Name	Mode	Default value	FSK/OOK Description
RegOsc (0x24)	7-4	unused	r	-	unused
	3	RcCalStart	wt	0x00	Triggers the calibration of the RC oscillator when set. Always reads 0. RC calibration must be triggered in Standby mode.
	2-0	ClkOut	rw	0x07 *	Selects CLKOUT frequency: 000 → FXOSC 001 → FXOSC / 2 010 → FXOSC / 4 011 → FXOSC / 8 100 → FXOSC / 16 101 → FXOSC / 32 110 → RC (automatically enabled) 111 → OFF
Packet Handling registers					
RegPreambleMsb (0x25)	7-0	PreambleSize(15:8)	rw	0x00	Size of the preamble to be sent (from *TxStartCondition* fulfilled). (MSB byte)
RegPreambleLsb (0x26)	7-0	PreambleSize(7:0)	rw	0x03	Size of the preamble to be sent (from *TxStartCondition* fulfilled). (LSB byte)
RegSyncConfig (0x27)	7-6	AutoRestartRxMode	rw	0x02	Controls the automatic restart of the receiver after the reception of a valid packet (PayloadReady or CrcOk): 00 → Off 01 → On, without waiting for the PLL to re-lock 10 → On, wait for the PLL to lock (frequency changed) 11 → reserved
	5	PreamblePolarity	rw	0x00	Sets the polarity of the Preamble 0 → 0xAA (default) 1 → 0x55
	4	SyncOn	rw	0x01	Enables the Sync word generation and detection: 0 → Off 1 → On
	3	FifoFillCondition	rw	0x00	FIFO filling condition: 0 → if *SyncAddress* interrupt occurs 1 → as long as *FifoFillCondition* is set
	2-0	SyncSize	rw	0x03	Size of the Sync word: (*SyncSize* + 1) bytes, (*SyncSize*) bytes if *ioHomeOn*=1
RegSyncValue1 (0x28)	7-0	SyncValue(63:56)	rw	0x01 *	1st byte of Sync word. (MSB byte) Used if *SyncOn* is set.
RegSyncValue2 (0x29)	7-0	SyncValue(55:48)	rw	0x01 *	2nd byte of Sync word Used if *SyncOn* is set and *(SyncSize +1)* >= 2.
RegSyncValue3 (0x2a)	7-0	SyncValue(47:40)	rw	0x01 *	3rd byte of Sync word. Used if *SyncOn* is set and *(SyncSize +1)* >= 3.
RegSyncValue4 (0x2b)	7-0	SyncValue(39:32)	rw	0x01 *	4th byte of Sync word. Used if *SyncOn* is set and *(SyncSize +1)* >= 4.

©2013 Semtech Corporation

Name (Address)	Bits	Variable Name	Mode	Default value	FSK/OOK Description
RegSyncValue5 (0x2c)	7-0	SyncValue(31:24)	rw	0x01 *	5th byte of Sync word. Used if *SyncOn* is set and *(SyncSize +1)* >= 5.
RegSyncValue6 (0x2d)	7-0	SyncValue(23:16)	rw	0x01 *	6th byte of Sync word. Used if *SyncOn* is set and *(SyncSize +1)* >= 6.
RegSyncValue7 (0x2e)	7-0	SyncValue(15:8)	rw	0x01 *	7th byte of Sync word. Used if *SyncOn* is set and *(SyncSize +1)* >= 7.
RegSyncValue8 (0x2f)	7-0	SyncValue(7:0)	rw	0x01 *	8th byte of Sync word. Used if *SyncOn* is set and *(SyncSize +1)* = 8.
RegPacketConfig1 (0x30)	7	PacketFormat	rw	0x01	Defines the packet format used: 0 → Fixed length 1 → Variable length
	6-5	DcFree	rw	0x00	Defines DC-free encoding/decoding performed: 00 → None (Off) 01 → Manchester 10 → Whitening 11 → reserved
	4	CrcOn	rw	0x01	Enables CRC calculation/check (Tx/Rx): 0 → Off 1 → On
	3	CrcAutoClearOff	rw	0x00	Defines the behavior of the packet handler when CRC check fails: 0 → Clear FIFO and restart new packet reception. No *PayloadReady* interrupt issued. 1 → Do not clear FIFO. *PayloadReady* interrupt issued.
	2-1	AddressFiltering	rw	0x00	Defines address based filtering in Rx: 00 → None (Off) 01 → Address field must match *NodeAddress* 10 → Address field must match *NodeAddress* or *BroadcastAddress* 11 → reserved
	0	CrcWhiteningType	rw	0x00	Selects the CRC and whitening algorithms: 0 → CCITT CRC implementation with standard whitening 1 → IBM CRC implementation with alternate whitening
RegPacketConfig2 (0x31)	7	unused	r	-	unused
	6	DataMode	rw	0x01	Data processing mode: 0 → Continuous mode 1 → Packet mode
	5	IoHomeOn	rw	0x00	Enables the io-homecontrol® compatibility mode 0 → Disabled 1 → Enabled
	4	IoHomePowerFrame	rw	0x00	reserved - Linked to io-homecontrol® compatibility mode
	3	BeaconOn	rw	0x00	Enables the Beacon mode in Fixed packet format
	2-0	PayloadLength(10:8)	rw	0x00	Packet Length Most significant bits

©2013 Semtech Corporation

Name (Address)	Bits	Variable Name	Mode	Default value	FSK/OOK Description
RegPayloadLength (0x32)	7-0	PayloadLength(7:0)	rw	0x40	If PacketFormat = 0 (fixed), payload length. If PacketFormat = 1 (variable), max length in Rx, not used in Tx.
RegNodeAdrs (0x33)	7-0	NodeAddress	rw	0x00	Node address used in address filtering.
RegBroadcastAdrs (0x34)	7-0	BroadcastAddress	rw	0x00	Broadcast address used in address filtering.
RegFifoThresh (0x35)	7	TxStartCondition	rw	0x01 *	Defines the condition to start packet transmission: 0 → *FifoLevel* (i.e. the number of bytes in the FIFO exceeds *FifoThreshold)* 1 → *FifoEmpty goes low*(i.e. at least one byte in the FIFO)
	6	unused	r	-	unused
	5-0	FifoThreshold	rw	0x0f	Used to trigger *FifoLevel* interrupt, when: number of bytes in FIFO >= FifoThreshold + 1
Sequencer registers					
RegSeqConfig1 (0x36)	7	SequencerStart	wt	0x00	Controls the top level Sequencer When set to '1', executes the "Start" transition. The sequencer can only be enabled when the chip is in Sleep or Standby mode.
	6	SequencerStop	wt	0x00	Forces the Sequencer Off. Always reads '0'
	5	IdleMode	rw	0x00	Selects chip mode during the state: 0: Standby mode 1: Sleep mode
	4-3	FromStart	rw	0x00	Controls the Sequencer transition when *SequencerStart* is set to 1 in Sleep or Standby mode: 00: to LowPowerSelection 01: to Receive state 10: to Transmit state 11: to Transmit state on a *FifoLevel* interrupt
	2	LowPowerSelection	rw	0x00	Selects the Sequencer LowPower state after a *to LowPowerSelection* transition: 0: SequencerOff state with chip on Initial mode 1: Idle state with chip on *Standby* or *Sleep* mode depending on *IdleMode* *Note: Initial mode is the chip LowPower mode at Sequencer Start.*
	1	FromIdle	rw	0x00	Controls the Sequencer transition from the Idle state on a T1 interrupt: 0: to Transmit state 1: to Receive state
	0	FromTransmit	rw	0x00	Controls the Sequencer transition from the Transmit state: 0: to LowPowerSelection on a *PacketSent* interrupt 1: to Receive state on a *PacketSent* interrupt

©2013 Semtech Corporation

Name (Address)	Bits	Variable Name	Mode	Default value	FSK/OOK Description
RegSeqConfig2 (0x37)	7-5	FromReceive	rw	0x00	Controls the Sequencer transition from the Receive state 000 and 111: unused 001: to PacketReceived state on a *PayloadReady* interrupt 010: to LowPowerSelection on a *PayloadReady* interrupt 011: to PacketReceived state on a *CrcOk* interrupt (1) 100: to SequencerOff state on a *Rssi* interrupt 101: to SequencerOff state on a *SyncAddress* interrupt 110: to SequencerOff state on a *PreambleDetect* interrupt Irrespective of this setting, transition to LowPowerSelection on a T2 interrupt (1) If the CRC is wrong (corrupted packet, with CRC on but *CrcAutoClearOn*=0), the *PayloadReady* interrupt will drive the sequencer to RxTimeout state.
	4-3	FromRxTimeout	rw	0x00	Controls the state-machine transition from the Receive state on a *RxTimeout* interrupt (and on *PayloadReady* if FromReceive = 011): 00: to Receive State, via ReceiveRestart 01: to Transmit state 10: to LowPowerSelection 11: to SequencerOff state *Note: RxTimeout interrupt is a TimeoutRxRssi, TimeoutRxPreamble or TimeoutSignalSync interrupt*
	2-0	FromPacketReceived	rw	0x00	Controls the state-machine transition from the PacketReceived state: 000: to SequencerOff state 001: to Transmit state on a *FifoEmpty* interrupt 010: to LowPowerSelection 011: to Receive via FS mode, if frequency was changed 100: to Receive state (no frequency change)
RegTimerResol (0x38)	7-4	unused	r	-	unused
	3-2	Timer1Resolution	rw	0x00	Resolution of Timer 1 00: Timer1 disabled 01: 64 us 10: 4.1 ms 11: 262 ms
	1-0	Timer2Resolution	rw	0x00	Resolution of Timer 2 00: Timer2 disabled 01: 64 us 10: 4.1 ms 11: 262 ms
RegTimer1Coef (0x39)	7-0	Timer1Coefficient	rw	0xf5	Multiplying coefficient for Timer 1
RegTimer2Coef (0x3a)	7-0	Timer2Coefficient	rw	0x20	Multiplying coefficient for Timer 2

©2013 Semtech Corporation

Name (Address)	Bits	Variable Name	Mode	Default value	FSK/OOK Description
Service registers					
RegImageCal (0x3b)	7	AutoImageCalOn	rw	0x00 *	Controls the Image calibration mechanism 0 → Calibration of the receiver depending on the temperature is disabled 1 → Calibration of the receiver depending on the temperature enabled.
	6	ImageCalStart	wt	-	Triggers the IQ and RSSI calibration when set in Standby mode.
	5	ImageCalRunning	r	0x00	Set to 1 while the Image and RSSI calibration are running. Toggles back to 0 when the process is completed
	4	unused	r	-	unused
	3	TempChange	r	0x00	IRQ flag witnessing a temperature change exceeding TempThreshold since the last Image and RSSI calibration: 0 → Temperature change lower than TempThreshold 1 → Temperature change greater than TempThreshold
	2-1	TempThreshold	rw	0x01	Temperature change threshold to trigger a new I/Q calibration 00 → 5 °C 01 → 10 °C 10 → 15 °C 11 → 20 °C
	0	TempMonitorOff	rw	0x00	Controls the temperature monitor operation: 0 → Temperature monitoring done in all modes except Sleep and Standby 1 → Temperature monitoring stopped.
RegTemp (0x3c)	7-0	TempValue	r	-	Measured temperature -1°C per Lsb Needs calibration for absolute accuracy
RegLowBat (0x3d)	7-4	unused	r	-	unused
	3	LowBatOn	rw	0x00	Low Battery detector enable signal 0 → LowBat detector disabled 1 → LowBat detector enabled
	2-0	LowBatTrim	rw	0x02	Trimming of the LowBat threshold: 000 → 1.695 V 001 → 1.764 V 010 → 1.835 V (d) 011 → 1.905 V 100 → 1.976 V 101 → 2.045 V 110 → 2.116 V 111 → 2.185 V
Status registers					

©2013 Semtech Corporation

Name (Address)	Bits	Variable Name	Mode	Default value	FSK/OOK Description
RegIrqFlags1 (0x3e)	7	ModeReady	r	-	Set when the operation mode requested in *Mode*, is ready - Sleep: Entering Sleep mode - Standby: XO is running - FS: PLL is locked - Rx: RSSI sampling starts - Tx: PA ramp-up completed Cleared when changing the operating mode.
	6	RxReady	r	-	Set in Rx mode, after RSSI, AGC and AFC. Cleared when leaving Rx.
	5	TxReady	r	-	Set in Tx mode, after PA ramp-up. Cleared when leaving Tx.
	4	PllLock	r	-	Set (in FS, Rx or Tx) when the PLL is locked. Cleared when it is not.
	3	Rssi	rwc	-	Set in Rx when the *RssiValue* exceeds *RssiThreshold.* Cleared when leaving Rx or setting this bit to 1.
	2	Timeout	r	-	Set when a timeout occurs Cleared when leaving Rx or FIFO is emptied.
	1	PreambleDetect	rwc	-	Set when the Preamble Detector has found valid Preamble. bit clear when set to 1
	0	SyncAddressMatch	rwc	-	Set when Sync and Address (if enabled) are detected. Cleared when leaving Rx or FIFO is emptied. This bit is read only in Packet mode, rwc in Continuous mode
RegIrqFlags2 (0x3f)	7	FifoFull	r	-	Set when FIFO is full (i.e. contains 66 bytes), else cleared.
	6	FifoEmpty	r	-	Set when FIFO is empty, and cleared when there is at least 1 byte in the FIFO.
	5	FifoLevel	r	-	Set when the number of bytes in the FIFO strictly exceeds *FifoThreshold*, else cleared.
	4	FifoOverrun	rwc	-	Set when FIFO overrun occurs. (except in Sleep mode) Flag(s) and FIFO are cleared when this bit is set. The FIFO then becomes immediately available for the next transmission / reception.
	3	PacketSent	r	-	Set in Tx when the complete packet has been sent. Cleared when exiting Tx
	2	PayloadReady	r	-	Set in Rx when the payload is ready (i.e. last byte received and CRC, if enabled and *CrcAutoClearOff* is cleared, is Ok). Cleared when FIFO is empty.
	1	CrcOk	r	-	Set in Rx when the CRC of the payload is Ok. Cleared when FIFO is empty.
	0	LowBat	rwc	-	Set when the battery voltage drops below the Low Battery threshold. Cleared only when set to 1 by the user.
IO control registers					

©2013 Semtech Corporation

Name (Address)	Bits	Variable Name	Mode	Default value	FSK/OOK Description
RegDioMapping1 (0x40)	7-6	Dio0Mapping	rw	0x00	Mapping of pins DIO0 to DIO5 See Table 23 for mapping in LoRa mode See Table 27 for mapping in Continuous mode See table 28 for mapping in Packet mode
	5-4	Dio1Mapping	rw	0x00	
	3-2	Dio2Mapping	rw	0x00	
	1-0	Dio3Mapping	rw	0x00	
RegDioMapping2 (0x41)	7-6	Dio4Mapping	rw	0x00	
	5-4	Dio5Mapping	rw	0x00	
	3-1	reserved	rw	0x00	reserved. Retain default value
	0	MapPreambleDetect	rw	0x00	Allows the mapping of either *Rssi* Or *PreambleDetect* to the DIO pins, as summarized on Table 27 and Table 28 0 → *Rssi* interrupt 1 → *PreambleDetect* interrupt
Version register					
RegVersion (0x42)	7-0	Version	r	0x11	Version code of the chip. Bits 7-4 give the full revision number; bits 3-0 give the metal mask revision number.
Additional registers					
RegPllHop (0x44)	7	FastHopOn	rw	0x00	Bypasses the main state machine for a quick frequency hop. Writing RegFrfLsb will trigger the frequency change. 0 → Frf is validated when FSTx or FSRx is requested 1 → Frf is validated triggered when RegFrfLsb is written
	6-0	reserved	rw	0x2d	reserved
RegTcxo (0x4b)	7-5	reserved	rw	0x00	reserved. Retain default value
	4	TcxoInputOn	rw	0x00	Controls the crystal oscillator 0 → Crystal Oscillator with external Crystal 1 → External clipped sine TCXO AC-connected to XTA pin
	3-0	reserved	rw	0x09	Reserved. Retain default value.
RegPaDac (0x4d)	7-3	reserved	rw	0x10	reserved. Retain default value
	2-0	PaDac	rw	0x04	Enables the +20dBm option on PA_BOOST pin 0x04 → Default value 0x07 → +20dBm on PA_BOOST when OutputPower=1111
RegFormerTemp (0x5b)	7-0	FormerTemp	rw	-	Temperature saved during the latest IQ (RSSI and Image) calibrated. Same format as *TempValue* in *RegTemp*.
RegBitrateFrac (0x5d)	7-4	unused	r	0x00	unused
	3-0	BitRateFrac	rw	0x00	Fractional part of the bit rate divider (Only valid for FSK) If *BitRateFrac*> 0 then: $BitRate = \frac{FXOSC}{BitRate(15,0) + \frac{BitrateFrac}{16}}$

©2013 Semtech Corporation

Name (Address)	Bits	Variable Name	Mode	Default value	FSK/OOK Description
RegAgcRef (0x61)	7-6	unused	r	-	unused
	5-0	AgcReferenceLevel	rw	0x19	Sets the floor reference for all AGC thresholds: AGC Reference[dBm]= -174dBm+10*log(2**RxBw*)+SNR+*AgcReferenceLevel* SNR = 8dB, fixed value
RegAgcThresh1 (0x62)	7-5	unused	r	-	unused
	4-0	AgcStep1	rw	0x0c	Defines the 1st AGC Threshold
RegAgcThresh2 (0x63)	7-4	AgcStep2	rw	0x04	Defines the 2nd AGC Threshold:
	3-0	AgcStep3	rw	0x0b	Defines the 3rd AGC Threshold:
RegAgcThresh3 (0x64)	7-4	AgcStep4	rw	0x0c	Defines the 4th AGC Threshold:
	3-0	AgcStep5	rw	0x0c	Defines the 5th AGC Threshold:

6.3. Band Specific Additional Registers

The registers in the address space from 0x61 to 0x73 are specific for operation in the lower frequency bands (below 525 MHz), or in the upper frequency bands (above 860 MHz). Their programmed value may differ, and are retained when switching from lower to high frequency and vice-versa. The access to the band specific registers is granted by enabling or disabling the bit 3 LowFrequencyModeOn of the RegOpMode register. By default, the bit LowFrequencyModeOn is at '1' indicating that the registers are configured for the low frequency band.

Table 87 Low Frequency Additional Registers

Name (Address)	Bits	Variable Name	Mode	Default value	Low Frequency Additional Registers
RegAgcRefLf (0x61)	7-6	unused	r	-	unused
	5-0	AgcReferenceLevel	rw	0x19	Sets the floor reference for all AGC thresholds: AGC Reference[dBm]= -174dBm+10*log(2**RxBw*)+SNR+*AgcReferenceLevel* SNR = 8dB, fixed value
RegAgcThresh1Lf (0x62)	7-5	unused	r	-	unused
	4-0	AgcStep1	rw	0x0c	Defines the 1st AGC Threshold
RegAgcThresh2Lf (0x63)	7-4	AgcStep2	rw	0x04	Defines the 2nd AGC Threshold:
	3-0	AgcStep3	rw	0x0b	Defines the 3rd AGC Threshold:
RegAgcThresh3Lf (0x64)	7-4	AgcStep4	rw	0x0c	Defines the 4th AGC Threshold:
	3-0	AgcStep5	rw	0x0c	Defines the 5th AGC Threshold:
RegPllLf (0x70)	7-6	PllBandwidth	rw	0x03	Controls the PLL bandwidth: 00 → 75 kHz 10 → 225 kHz 01 → 150 kHz 11 → 300 kHz
	5-0	reserved	rw	0x10	reserved. Retain default value

©2013 Semtech Corporation

Table 88 High Frequency Additional Registers

Name (Address)	Bits	Variable Name	Mode	Default value	Low Frequency Additional Registers
RegAgcRefHf (0x61)	7-6	unused	r	-	unused
	5-0	AgcReferenceLevel	rw	0x1c	Sets the floor reference for all AGC thresholds: AGC Reference[dBm]= -174dBm+10*log(2**RxBw*)+SNR+*AgcReferenceLevel* SNR = 8dB, fixed value
RegAgcThresh1Hf (0x62)	7-5	unused	r	-	unused
	4-0	AgcStep1	rw	0x0e	Defines the 1st AGC Threshold
RegAgcThresh2Hf (0x63)	7-4	AgcStep2	rw	0x05	Defines the 2nd AGC Threshold:
	3-0	AgcStep3	rw	0x0b	Defines the 3rd AGC Threshold:
RegAgcThresh3Hf (0x64)	7-4	AgcStep4	rw	0x0c	Defines the 4th AGC Threshold:
	3-0	AgcStep5	rw	0x0c	Defines the 5th AGC Threshold:
RegPllHf (0x70)	7-6	PllBandwidth	rw	0x03	Controls the PLL bandwidth: 00 → 75 kHz 10 → 225 kHz 01 → 150 kHz 11 → 300 kHz
	5-0	reserved	rw	0x10	reserved. Retain default value

©2013 Semtech Corporation

6.4. LoRa™ Mode Register Map

This section details the SX1276/77/78 register mapping and the precise contents of each register in LoRa™ mode.

It is essential to understand that the LoRa modem is controlled independently of the FSK modem. Therefore, care should be taken when accessing the registers, especially as some register may have the same name in LoRa or FSK mode.

The LoRa registers are only accessible when the device is set in Lora mode (and, in the same way, the FSK register are only accessible in FSK mode). However, in some cases, it may be necessary to access some of the FSK register while in LoRa mode. To this aim, the *AccesSharedReg* bit was created in the *RegOpMode* register. This bit, when set to '1', will grant access to the FSK register 0x0D up to the register 0x3F. Once the setup has been done, it is strongly recommended to clear this bit so that LoRa register can be accessed normally.

Convention: r: read, w: write, c : set to clear and t: trigger.

Name (Address)	Bits	Variable Name	Mode	Reset	LoRa™ Description
RegFifo (0x00)	7-0	Fifo	rw	0x00	LoRa™ base-band FIFO data input/output. FIFO is cleared an not accessible when device is in SLEEP mode
Common Register Settings					
RegOpMode (0x01)	7	LongRangeMode	rw	0x0	0 → FSK/OOK Mode 1 → LoRa™ Mode This bit can be modified only in Sleep mode. A write operation on other device modes is ignored.
	6	AccessSharedReg	rw	0x0	This bit operates when device is in Lora mode; if set it allows access to FSK registers page located in address space (0x0D:0x3F) while in LoRa mode 0 → Access LoRa registers page 0x0D: 0x3F 1 → Access FSK registers page (in mode LoRa) 0x0D: 0x3F
	5-4	reserved	r	0x00	reserved
	3	LowFrequencyModeOn	rw	0x01	Access Low Frequency Mode registers 0 → High Frequency Mode (access to HF test registers) 1 → Low Frequency Mode (access to LF test registers)
	2-0	Mode	rwt	0x01	Device modes 000 → SLEEP 001 → STDBY 010 → Frequency synthesis TX (FSTX) 011 → Transmit (TX) 100 → Frequency synthesis RX (FSRX) 101 → Receive continuous (RXCONTINUOUS) 110 → receive single (RXSINGLE) 111 → Channel activity detection (CAD)
(0x02)	7-0	reserved	r	0x00	-
(0x03)	7-0	reserved	r	0x00	-
(0x04)	7-0	reserved	rw	0x00	-
(0x05)	7-0	reserved	r	0x00	-
RegFrMsb (0x06)	7-0	Frf(23:16)	rw	0x6c	MSB of RF carrier frequency
RegFrMid (0x07)	7-0	Frf(15:8)	rw	0x80	MSB of RF carrier frequency

©2013 Semtech Corporation

Name (Address)	Bits	Variable Name	Mode	Reset	LoRa™ Description
RegFrLsb (0x08)	7-0	Frf(7:0)	rwt	0x00	LSB of RF carrier frequency $f_{RF} = \frac{F(XOSC) \cdot Frf}{2^{19}}$ Resolution is 61.035 Hz if F(XOSC) = 32 MHz. Default value is 0x6c8000 = 434 MHz. Register values must be modified only when device is in SLEEP or STAND-BY mode.
Registers for RF blocks					
RegPaConfig (0x09)	7	PaSelect	rw	0x00	Selects PA output pin 0 → RFO pin. Output power is limited to +14 dBm. 1 → PA_BOOST pin. Output power is limited to +20 dBm
	6-4	MaxPower	rw	0x04	Select max output power: Pmax=10.8+0.6*MaxPower [dBm]
	3-0	OutputPower	rw	0x0f	Pout=Pmax-(15-OutputPower) if PaSelect = 0 (RFO pin) Pout=17-(15-OutputPower) if PaSelect = 1 (PA_BOOST pin)
RegPaRamp (0x0A)	7-5	unused	r	-	unused
	4	reserved	rw	0x00	reserved
	3-0	PaRamp(3:0)	rw	0x09	Rise/Fall time of ramp up/down in FSK 0000 → 3.4 ms 0001 → 2 ms 0010 → 1 ms 0011 → 500 us 0100 → 250 us 0101 → 125 us 0110 → 100 us 0111 → 62 us 1000 → 50 us 1001 → 40 us 1010 → 31 us 1011 → 25 us 1100 → 20 us 1101 → 15 us 1110 → 12 us 1111 → 10 us
RegOcp (0x0B	7-6	unused	r	0x00	unused
	5	OcpOn	rw	0x01	Enables overload current protection (OCP) for PA: 0 → OCP disabled 1 → OCP enabled
	4-0	OcpTrim	rw	0x0b	Trimming of OCP current: Imax = 45+5*OcpTrim [mA] if OcpTrim <= 15 (120 mA) / Imax = -30+10*OcpTrim [mA] if 15 < OcpTrim <= 27 (130 to 240 mA) Imax = 240mA for higher settings Default Imax = 100mA

©2013 Semtech Corporation

Name (Address)	Bits	Variable Name	Mode	Reset	LoRa™ Description
RegLna (0x0C)	7-5	LnaGain	rwx	0x01	LNA gain setting: 000 → not used 001 → G1 = maximum gain 010 → G2 011 → G3 100 → G4 101 → G5 110 → G6 = minimum gain 111 → not used
	4-3	LnaBoostLf	rw	0x00	Low Frequency (RFI_LF) LNA current adjustment 00 → Default LNA current Other → Reserved
	2	reserved	rw	0x00	reserved
	1-0	LnaBoostHf	rw	0x00	High Frequency (RFI_HF) LNA current adjustment 00 → Default LNA current 11 → Boost on, 150% LNA current
Lora page registers					
RegFifoAddrPtr (0x0D)	7-0	FifoAddrPtr	rw	0x00	SPI interface address pointer in FIFO data buffer.
RegFifoTxBaseAddr (0x0E)	7-0	FifoTxBaseAddr	rw	0x80	write base address in FIFO data buffer for TX modulator
RegFifoRxBaseAddr (0x0F)	7-0	FifoRxBaseAddr	rw	0x00	read base address in FIFO data buffer for RX demodulator
RegFifoRxCurrentAddr (0x10)	7-0	FifoRxCurrentAddr	r	n/a	Start address (in data buffer) of last packet received
RegIrqFlagsMask (0x11)	7	RxTimeoutMask	rw	0x00	Timeout interrupt mask: setting this bit masks the corresponding IRQ in RegIrqFlags
	6	RxDoneMask	rw	0x00	Packet reception complete interrupt mask: setting this bit masks the corresponding IRQ in RegIrqFlags
	5	PayloadCrcErrorMask	rw	0x00	Payload CRC error interrupt mask: setting this bit masks the corresponding IRQ in RegIrqFlags
	4	ValidHeaderMask	rw	0x00	Valid header received in Rx mask: setting this bit masks the corresponding IRQ in RegIrqFlags
	3	TxDoneMask	rw	0x00	FIFO Payload transmission complete interrupt mask: setting this bit masks the corresponding IRQ in RegIrqFlags
	2	CadDoneMask	rw	0x00	CAD complete interrupt mask: setting this bit masks the corresponding IRQ in RegIrqFlags
	1	FhssChangeChannelMask	rw	0x00	FHSS change channel interrupt mask: setting this bit masks the corresponding IRQ in RegIrqFlags
	0	CadDetectedMask	rw	0x00	Cad Detected Interrupt Mask: setting this bit masks the corresponding IRQ in RegIrqFlags

©2013 Semtech Corporation

Name (Address)	Bits	Variable Name	Mode	Reset	LoRa™ Description
RegIrqFlags (0x12)	7	RxTimeout	rc	0x00	Timeout interrupt: a write operation clears IRQ
	6	RxDone	rc	0x00	Packet reception complete interrupt: a write operation clears IRQ
	5	PayloadCrcError	rc	0x00	Payload CRC error interrupt: a write operation clears IRQ
	4	ValidHeader	rc	0x00	Valid header received in Rx: a write operation clears IRQ
	3	TxDone	rc	0x00	FIFO Payload transmission complete interrupt: a write operation clears IRQ
	2	CadDone	rc	0x00	CAD complete: write to clear: a write operation clears IRQ
	1	FhssChangeChannel	rc	0x00	FHSS change channel interrupt: a write operation clears IRQ
	0	CadDetected	rc	0x00	Valid Lora signal detected during CAD operation: a write operation clears IRQ
RegRxNbBytes (0x13)	7-0	FifoRxBytesNb	r	n/a	Number of payload bytes of latest packet received
RegRxHeaderCntValueMsb (0x14)	7-0	ValidHeaderCntMsb(15:8)	r	n/a	Number of valid headers received since last transition into Rx mode, MSB(15:8). Header and packet counters are reseted in Sleep mode.
RegRxHeaderCntValueLsb (0x15)	7-0	ValidHeaderCntLsb(7:0)	r	n/a	Number of valid headers received since last transition into Rx mode, LSB(7:0). Header and packet counters are reseted in Sleep mode.
RegRxPacketCntValueMsb (0x16)	7-0	ValidPacketCntMsb(15:8)	rc	n/a	Number of valid packets received since last transition into Rx mode, MSB(15:8). Header and packet counters are reseted in Sleep mode.
RegRxPacketCntValueLsb (0x17)	7-0	ValidPacketCntLsb(7:0)	r	n/a	Number of valid packets received since last transition into Rx mode, LSB(7:0). Header and packet counters are reseted in Sleep mode.
RegModemStat (0x18)	7-5	RxCodingRate	r	n/a	Coding rate of last header received
	4	ModemStatus	r	‘1’	Modem clear
	3		r	‘0’	Header info valid
	2		r	‘0’	RX on-going
	1		r	‘0’	Signal synchronized
	0		r	‘0’	Signal detected
RegPktSnrValue (0x19)	7-0	PacketSnr	r	n/a	Estimation of SNR on last packet received.In two’s compliment format mutiplied by 4. $$SNR[dB] = \frac{PacketSnr[twos\ compliment]}{4}$$

©2013 Semtech Corporation

Name (Address)	Bits	Variable Name	Mode	Reset	LoRa™ Description
RegPktRssiValue (0x1A)	7-0	PacketRssi	r	n/a	RSSI of the latest packet received (dBm) $RSSI[dBm] = -137 + PacketRssi$
RegRssiValue (0x1B)	7-0	Rssi	r	n/a	Current RSSI value (dBm) $RSSI[dBm] = -137 + Rssi$
RegHopChannel (0x1C)	7	PllTimeout	r	n/a	PLL failed to lock while attempting a TX/RX/CAD operation 1 → PLL did not lock 0 → PLL did lock
	6	RxPayloadCrcOn	r	n/a	CRC Information extracted from the received packet header 0 → Header indicates CRC off 1 → Header indicates CRC on
	5-0	FhssPresentChannel	r	n/a	Current value of frequency hopping channel in use.
RegModemConfig 1 (0x1D)	7-4	Bw	rw	0x07	Signal bandwidth: 0000 → 7.8 kHz 0001 → 10.4 kHz 0010 → 15.6 kHz 0011 → 20.8kHz 0100 → 31.25 kHz 0101 → 41.7 kHz 0110 → 62.5 kHz 0111 → 125 kHz 1000 → 250 kHz 1001 → 500 kHz other values → reserved In the lower band (169MHz), signal bandwidths 8&9 are not supported)
	3-1	CodingRate	rw	'001'	Error coding rate 001 → 4/5 010 → 4/6 011 → 4/7 100 → 4/8 All other values → reserved In implicit header mode should be set on receiver to determine expected coding rate. See Section 4.1.1.3
	0	ImplicitHeaderModeOn	rw	0x0	0 → Explicit Header mode 1 → Implicit Header mode

©2013 Semtech Corporation

Name (Address)	Bits	Variable Name	Mode	Reset	LoRa™ Description
RegModemConfig 2 (0x1E)	7-4	SpreadingFactor	rw	0x07	SF rate (expressed as a base-2 logarithm) 6 → 64 chips / symbol 7 → 128 chips / symbol 8 → 256 chips / symbol 9 → 512 chips / symbol 10 → 1024 chips / symbol 11 → 2048 chips / symbol 12 → 4096 chips / symbol other values reserved.
	3	TxContinuousMode	rw	0	0 → normal mode, a single packet is sent 1 → continuous mode, send multiple packets across the FIFO (used for spectral analysis)
	2	RxPayloadCrcOn	rw	0x00	CRC Information extracted from the received packet header 0 → Header indicates CRC off 1 → Header indicates CRC on
	1-0	SymbTimeout(9:8)	rw	0x00	RX Time-Out MSB
RegSymbTimeoutLsb (0x1F)	7-0	SymbTimeout(7:0)	rw	0x64	RX Time-Out LSB RX operation time-out value expressed as number of symbols: $TimeOut = SymbTimeout \cdot Ts$
RegPreambleMsb (0x20)	7-0	PreambleLength(15:8)	rw	0x0	Preamble length MSB, = PreambleLength + 4.25 Symbols See Section XX for more details.
RegPreambleLsb (0x21)	7-0	PreambleLength(7:0)	rw	0x8	Preamble Length LSB
RegPayloadLength (0x22)	7-0	PayloadLength(7:0)	rw	0x1	Payload length in bytes. The register needs to be set in implicit header mode for the expected packet length. A 0 value is not permitted
RegMaxPayloadLength (0x23)	7-0	PayloadMaxLength(7:0)	rw	0xff	Maximum payload length; if header payload length exceeds value a header CRC error is generated. Allows filtering of packet with a bad size.
RegHopPeriod (0x24)	7-0	FreqHoppingPeriod(7:0)	rw	0x0	Symbol periods between frequency hops. (0 = disabled). 1st hop always happen after the 1st header symbol
RegFifoRxByteAddr (0x25)	7-0	FifoRxByteAddrPtr	r	n/a	Current value of RX databuffer pointer (address of last byte written by Lora receiver)
RegModemConfig 3 (0x26)	7-4	Unused	r	0x00	
	3	MobileNode	rw	0x00	0 → Use for static node 1 → Use for mobile node
	2	AgcAutoOn	rw	0x00	0 → LNA gain set by register LnaGain 1 → LNA gain set by the internal AGC loop
	1-0	Reserved	rw	0x00	Reserved
(0x27) - (0x3F)	-	Reserved	r	n/a	Reserved

©2013 Semtech Corporation

7. Application Information

7.1. Crystal Resonator Specification

Table 89 shows the crystal resonator specification for the crystal reference oscillator circuit of the SX1276/77/78. This specification covers the full range of operation of the SX1276/77/78 and is employed in the reference design.

Table 89 Crystal Specification

Symbol	Description	Conditions	Min	Typ	Max	Unit
FXOSC	XTAL Frequency		-	32	-	MHz
RS	XTAL Serial Resistance		-	30	TBC	ohms
C0	XTAL Shunt Capacitance		-	2.8	TBC	pF
CFOOT	External Foot Capacitance	On each pin XTA and XTB	8	15	22	pF
CLOAD	Crystal Load Capacitance		6	-	12	pF

Notes - the initial frequency tolerance, temperature stability and ageing performance should be chosen in accordance with the target operating temperature range and the receiver bandwidth selected.

- the loading capacitance should be applied externally, and adapted to the actual Cload specification of the XTAL.

7.2. Reset of the Chip

A power-on reset of the SX1276/77/78 is triggered at power up. Additionally, a manual reset can be issued by controlling pin 6.

7.2.1. POR

If the application requires the disconnection of VDD from the SX1276/77/78, despite of the extremely low Sleep Mode current, the user should wait for 10 ms from of the end of the POR cycle before commencing communications over the SPI bus. Pin 7 (NRESET) should be left floating during the POR sequence.

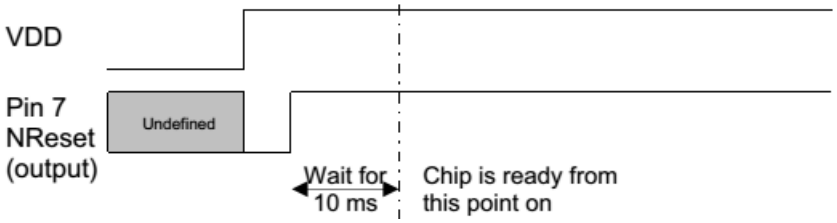

Figure 42. POR Timing Diagram

Please note that any CLKOUT activity can also be used to detect that the chip is ready.

©2013 Semtech Corporation

7.2.2. Manual Reset

A manual reset of the SX1276/77/78 is possible even for applications in which VDD cannot be physically disconnected. Pin 7 should be pulled low for a hundred microseconds, and then released. The user should then wait for 5 ms before using the chip.

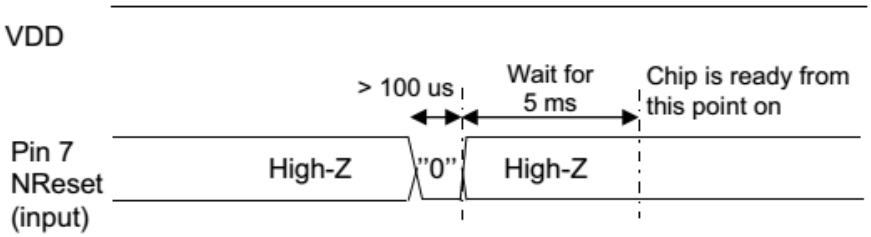

Figure 43. Manual Reset Timing Diagram

Note whilst pin 7 is driven low, an over current consumption of up to one milliampere can be seen on VDD.

7.3. Top Sequencer: Listen Mode Examples

In this scenario, the circuit spends most of the time in Idle mode, during which only the RC oscillator is on. Periodically the receiver wakes up and looks for incoming signal. If a wanted signal is detected, the receiver is kept on and data are analyzed. Otherwise, if there was no wanted signal for a defined period of time, the receiver is switched off until the next receive period.

During Listen mode, the Radio stays most of the time in a Low Power mode, resulting in very low average power consumption. The general timing diagram of this scenario is given in Figure 44.

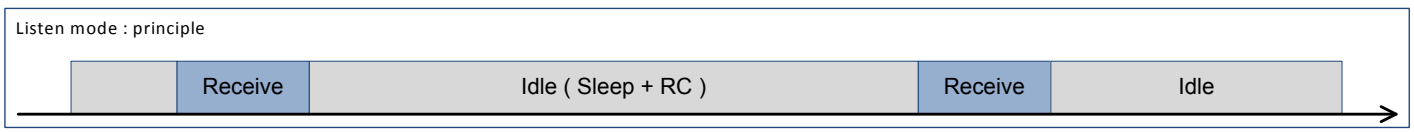

Figure 44. Listen Mode: Principle

An interrupt request is generated on a packet reception. The user can then take appropriate action.

Depending on the application and environment, there are several ways to implement Listen mode:

- Wake on a *PreambleDetect* interrupt
- Wake on *a SyncAddress* interrupt
- Wake on *a PayloadReady* interrupt

7.3.1. Wake on Preamble Interrupt

In one possible scenario, the sequencer polls for a Preamble detection. If a preamble signal is detected, the sequencer is switched off and the circuit stays in Receive mode until the user switches modes. Otherwise, the receiver is switched off until the next Rx period.

©2013 Semtech Corporation

7.3.1.1. Timing Diagram

When no signal is received, the circuit wakes every Timer1 + Timer2 and switches to Receive mode for a time defined by Timer2, as shown on the following diagram. If no Preamble is detected, it then switches back to Idle mode, i.e. Sleep mode with RC oscillator on.

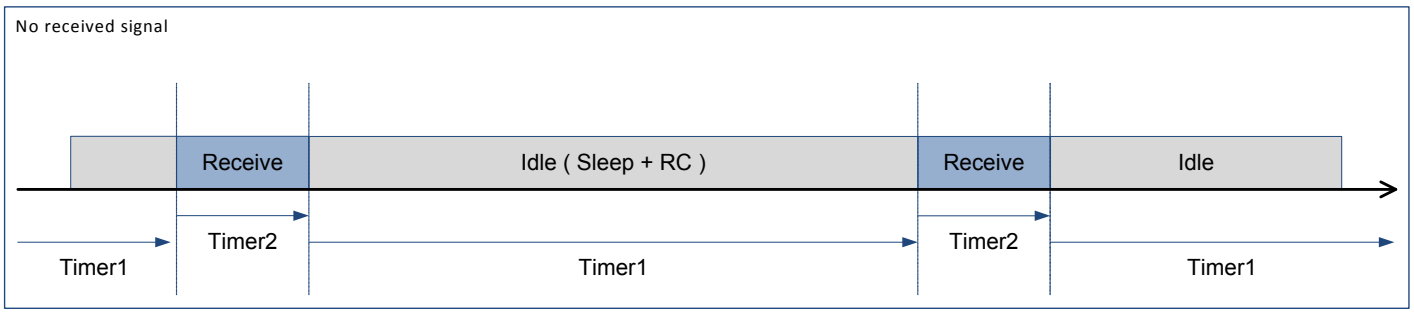

Figure 45. Listen Mode with No Preamble Received

If a Preamble signal is detected, the Sequencer is switched off. The *PreambleDetect* signal can be mapped to DIO4, in order to request the user's attention. The user can then take appropriate action.

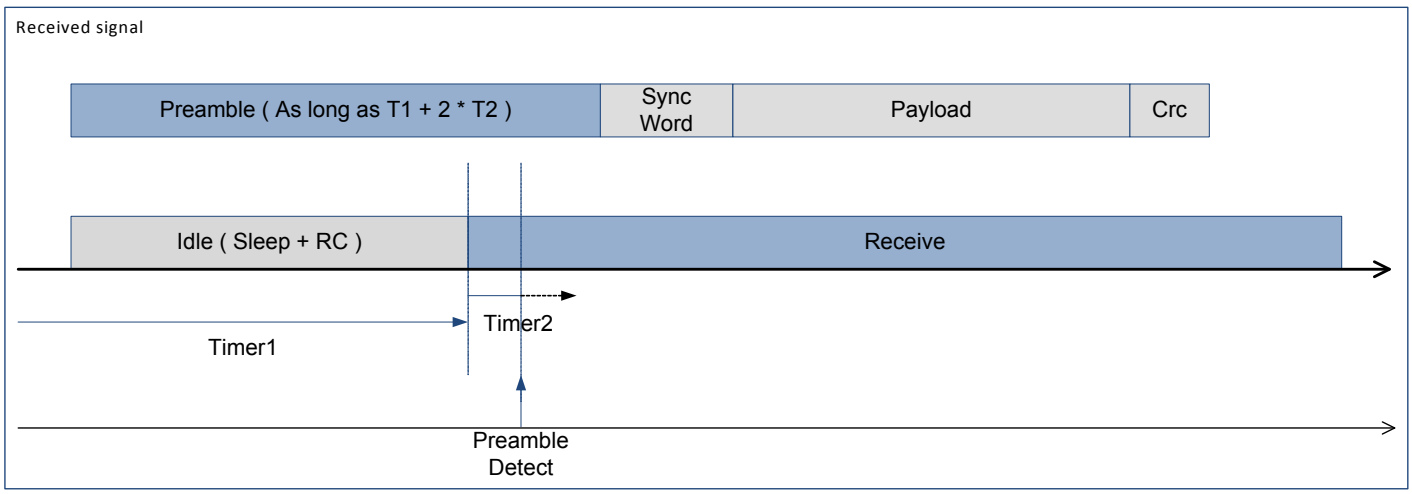

Figure 46. Listen Mode with Preamble Received

©2013 Semtech Corporation

7.3.1.2. Sequencer Configuration

The following graph shows Listen mode - Wake on *PreambleDetect* state machine:

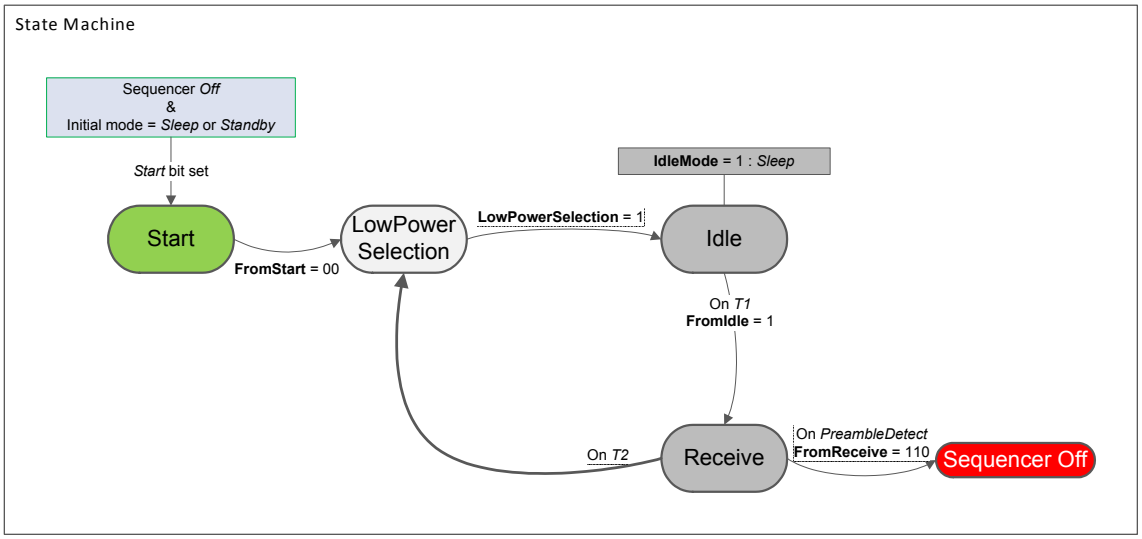

Figure 47. Wake On PreambleDetect State Machine

This example configuration is achieved as follows:

Table 90 Listen Mode with PreambleDetect Condition Settings

Variable	Effect
IdleMode	1: **Sleep** mode
FromStart	00: To **LowPowerSelection**
LowPowerSelection	1: To **Idle** state
FromIdle	1: To **Receive** state on *T1* interrupt
FromReceive	110: To **Sequencer Off** on *PreambleDetect* interrupt

T_{Timer2} defines the maximum duration the chip stays in Receive mode as long as no Preamble is detected. In order to optimize power consumption, Timer2 must be set just long enough for Preamble detection.

T_{Timer1} + T_{Timer2} defines the cycling period, i.e. time between two Preamble polling starts. In order to optimize average power consumption, Timer1 should be relatively long. However, increasing Timer1 also extends packet reception duration.

In order to insure packet detection and optimize the receiver's power consumption, the received packet Preamble should be as long as T_{Timer1} + 2 x T_{Timer2}.

An example of DIO configuration for this mode is described in the following table:

Table 91 Listen Mode with PreambleDetect Condition Recommended DIO Mapping

DIO	Value	Description
0	01	CrcOk
1	00	FifoLevel
3	00	FifoEmpty
4	11	PreambleDetect – Note: *MapPreambleDetect* bit should be set.

©2013 Semtech Corporation

7.3.2. Wake on SyncAddress Interrupt

In another possible scenario, the sequencer polls for a Preamble detection and then for a valid *SyncAddress* interrupt. If events occur, the sequencer is switched off and the circuit stays in Receive mode until the user switches modes. Otherwise, the receiver is switched off until the next Rx period.

7.3.2.1. Timing Diagram

Most of the sequencer running time is spent while no wanted signal is received. As shown by the timing diagram in Figure 48, the circuit wakes periodically for a short time, defined by RxTimeout. The circuit is in a Low Power mode for the rest of Timer1 + Timer2 (i.e. Timer1 + Timer2 - TrxTimeout)

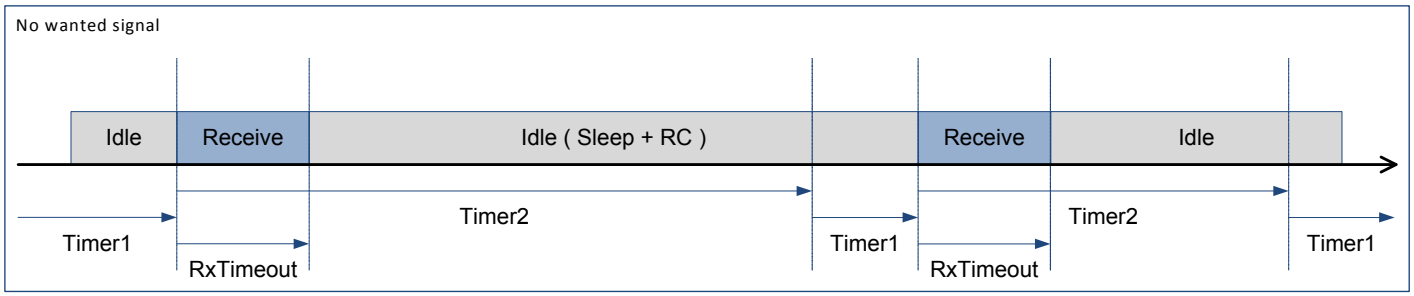

Figure 48. Listen Mode with no SyncAddress Detected

If a preamble is detected before *RxTimeout* timer ends, the circuit stays in Receive mode and waits for a valid *SyncAddress* detection. If none is detected by the end of Timer2, Receive mode is deactivated and the polling cycle resumes, without any user intervention.

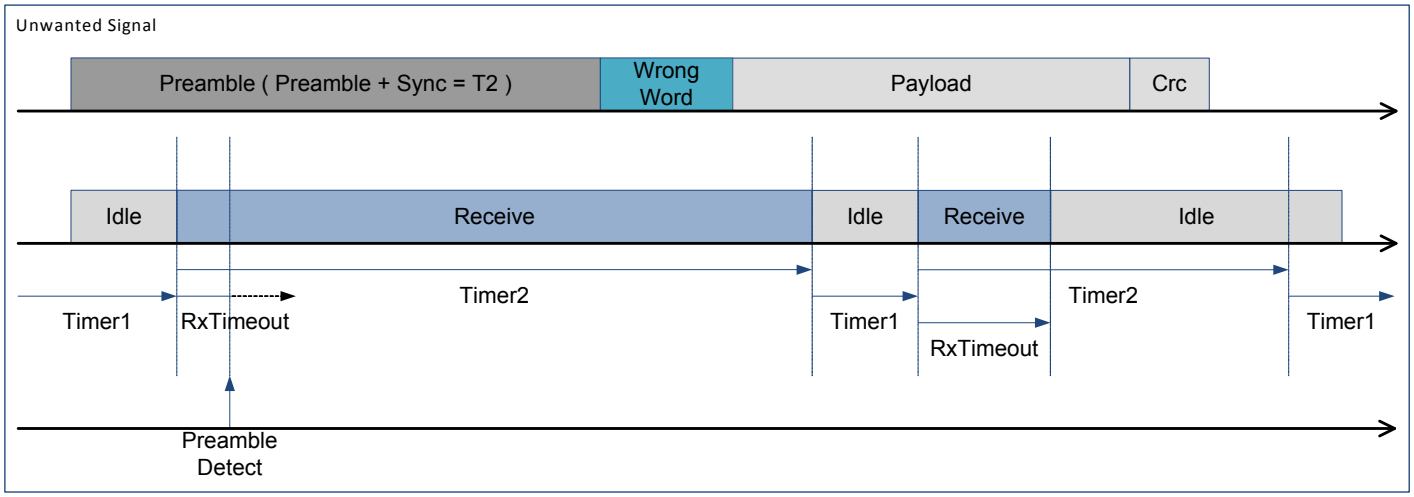

Figure 49. Listen Mode with Preamble Received and no SyncAddress

But if a valid Sync Word is detected, a *SyncAddress* interrupt is fired, the Sequencer is switched off and the circuit stays in Receive mode as long as the user doesn't switch modes.

©2013 Semtech Corporation

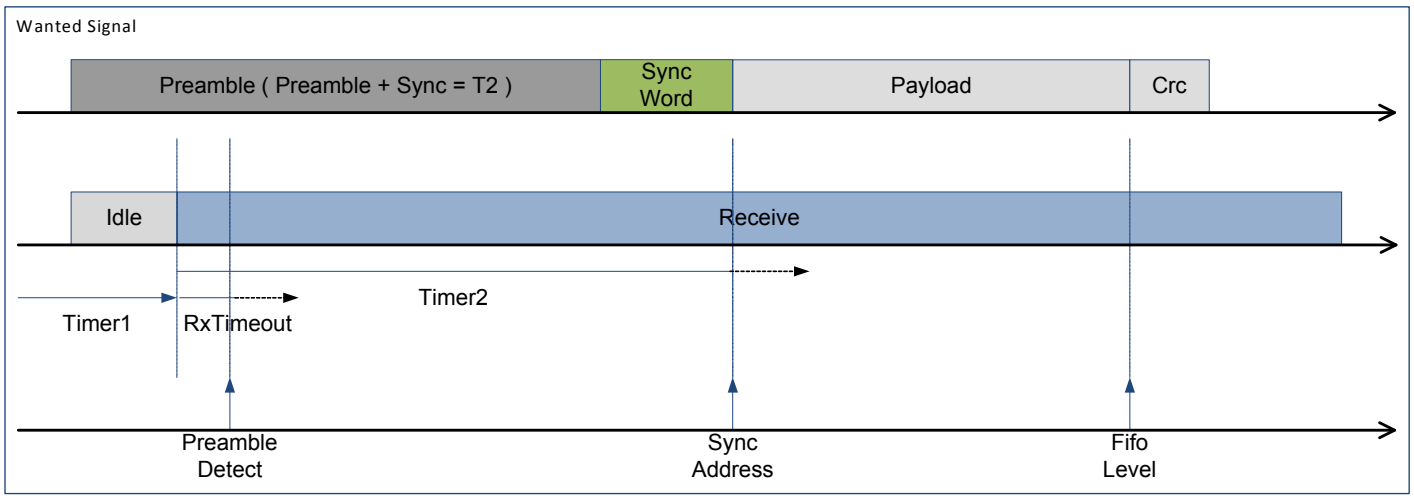

Figure 50. Listen Mode with Preamble Received & Valid SyncAddress

7.3.2.2. Sequencer Configuration

The following graph shows Listen mode - Wake on SyncAddress state machine:

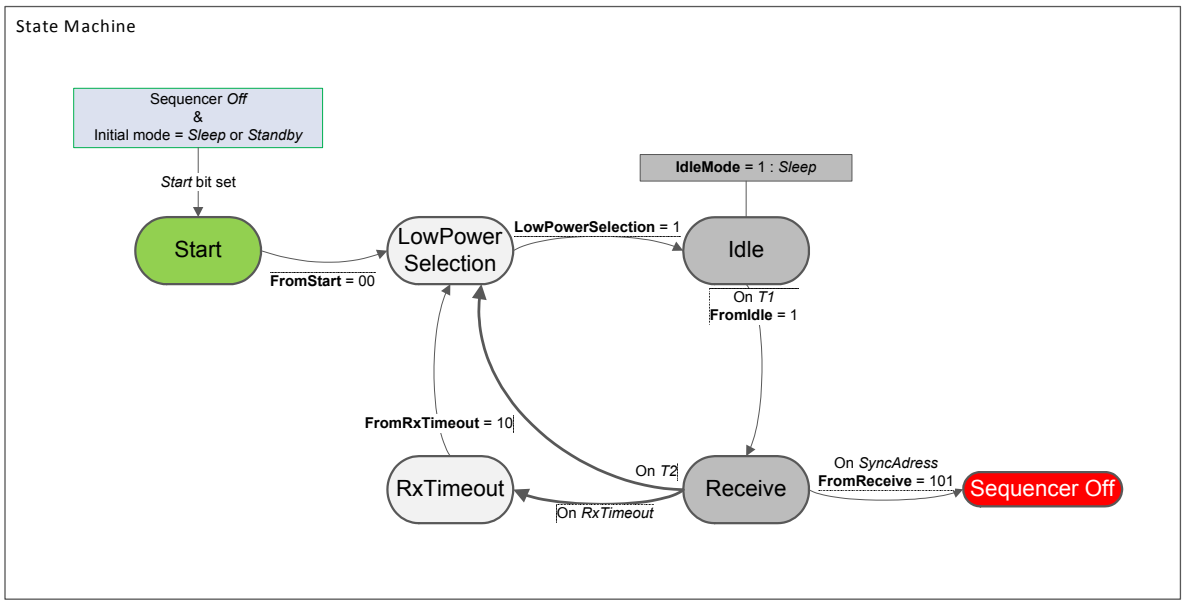

Figure 51. Wake On SyncAddress State Machine

©2013 Semtech Corporation

This example configuration is achieved as follows:

Table 92 Listen Mode with SyncAddress Condition Settings

Variable	Effect
IdleMode	1: **Sleep** mode
FromStart	00: To **LowPowerSelection**
LowPowerSelection	1: To **Idle** state
FromIdle	1: To **Receive** state on *T1* interrupt
FromReceive	101: To **Sequencer off** on *SyncAddress* interrupt
FromRxTimeout	10: To **LowPowerSelection**

$T_{TimeoutRxPreamble}$ should be set to just long enough to catch a preamble (depends on *PreambleDetectSize* and *BitRate*).

T_{Timer1} should be set to 64 µs (shortest possible duration).

T_{Timer2} is set so that $T_{Timer1} + T_{Timer2}$ defines the time between two start of reception.

In order to insure packet detection and optimize the receiver power consumption, the received packet Preamble should be defined so that $T_{Preamble} = T_{Timer2} - T_{SyncAddress}$ with $T_{SyncAddress} = (SyncSize + 1)*8/BitRate$.

An example of DIO configuration for this mode is described in the following table:

Table 93 Listen Mode with PreambleDetect Condition Recommended DIO Mapping

DIO	Value	Description
0	01	CrcOk
1	00	FifoLevel
2	11	SyncAddress
3	00	FifoEmpty
4	11	PreambleDetect – Note: *MapPreambleDetect* bit should be set.

©2013 Semtech Corporation

7.4. Top Sequencer: Beacon Mode

In this mode, a repetitive message is transmitted periodically. If the Payload being sent is always identical, and *PayloadLength* is smaller than the FIFO size, the use of the *BeaconOn* bit in *RegPacketConfig2* together with the Sequencer permit to achieve periodic beacon without any user intervention.

7.4.1. Timing diagram

In this mode, the Radio is switched to Transmit mode every T_{Timer1} + T_{Timer2} and back to Idle mode after *PacketSent*, as shown in the diagram below. The Sequencer insures minimal time is spent in Transmit mode, and therefore power consumption is optimized.

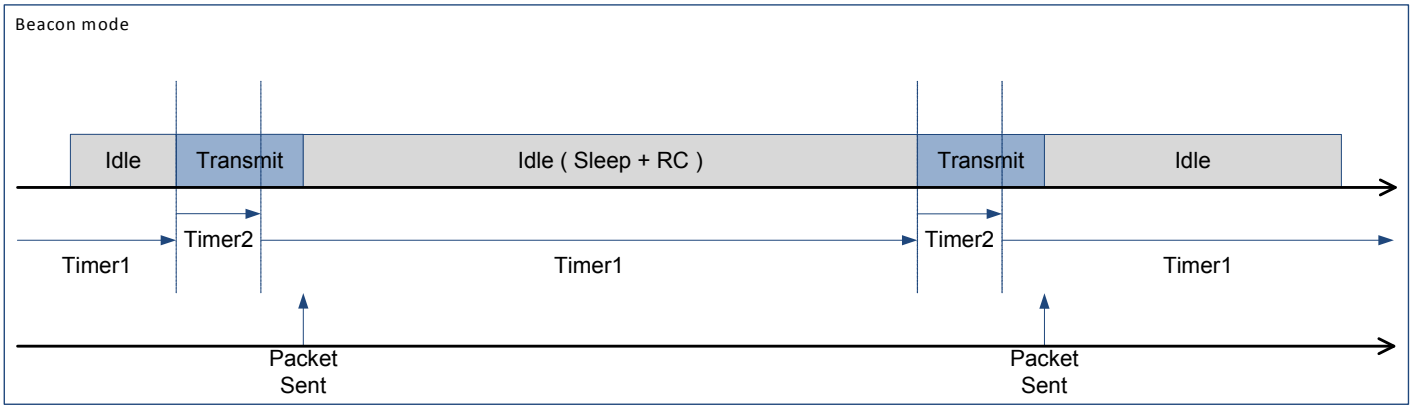

Figure 52. Beacon Mode Timing Diagram

7.4.2. Sequencer Configuration

The Beacon mode state machine is presented in the following graph. It is noticeable that the sequencer enters an infinite loop and can only be stopped by setting *SequencerStop* bit in *RegSeqConfig1*.

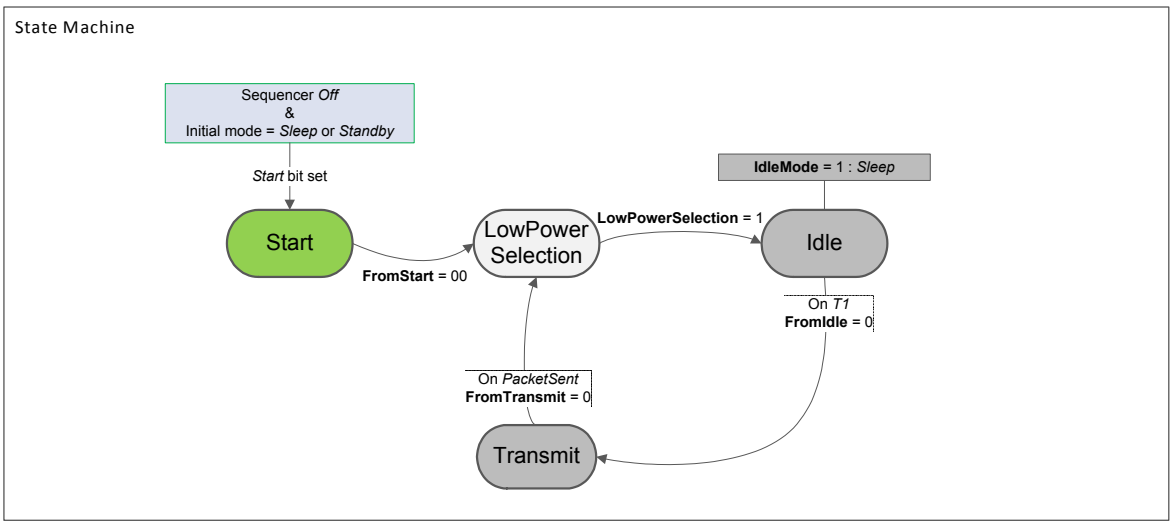

Figure 53. Beacon Mode State Machine

©2013 Semtech Corporation

This example is achieved by programming the Sequencer as follows:

Table 94 Beacon Mode Settings

Variable	Effect
IdleMode	1: **Sleep** mode
FromStart	00: To **LowPowerSelection**
LowPowerSelection	1: To **Idle** state
FromIdle	0: To **Transmit** state on *T1* interrupt
FromTransmit	0: To **LowPowerSelection** on *PacketSent* interrupt

$T_{Timer1} + T_{Timer2}$ define the time between the start of two transmissions.

©2013 Semtech Corporation

7.5. Example CRC Calculation

The following routine(s) may be implemented to mimic the CRC calculation of the SX1276/77/78:

```
// CRC types
#define CRC_TYPE_CCITT                              0
#define CRC_TYPE_IBM                                1

// Polynomial = X^16 + X^12 + X^5 + 1
#define POLYNOMIAL_CCITT                            0x1021
// Polynomial = X^16 + X^15 + X^2 + 1
#define POLYNOMIAL_IBM                              0x8005

// Seeds
#define CRC_IBM_SEED                                0xFFFF
#define CRC_CCITT_SEED                              0x1D0F

/*
 * CRC algorithm implementation
 *
 * \param[IN] crc Previous CRC value
 * \param[IN] data New data to be added to the CRC
 * \param[IN] polynomial CRC polynomial selection [CRC_TYPE_CCITT, CRC_TYPE_IBM]
 *
 * \retval crc New computed CRC
 */
U16 ComputeCrc( U16 crc, U8 data, U16 polynomial )
{
    U8 i;
    for( i = 0; i < 8; i++ )
    {
        if( ( ( ( crc & 0x8000 ) >> 8 ) ^ ( data & 0x80 ) ) != 0 )
        {
            crc <<= 1;                  // shift left once
            crc ^= polynomial;          // XOR with polynomial
        }
        else
        {
            crc <<= 1;                  // shift left once
        }
        data <<= 1;                     // Next data bit
    }
    return crc;
}

/*
 * CRC algorithm implementation
 *
 * \param[IN] buffer Array containing the data
 * \param[IN] bufferLength Buffer length
 * \param[IN] crcType Selects the CRC polynomial[CRC_TYPE_CCITT, CRC_TYPE_IBM]
 *
 * \retval crc Buffer computed CRC
 */
U16 RadioPacketComputeCrc( U8 *buffer, U8 bufferLength, U8 crcType )
{
    U8 i;
    U16 crc;
    U16 polynomial;

    polynomial = ( crcType == CRC_TYPE_IBM ) ? POLYNOMIAL_IBM : POLYNOMIAL_CCITT;
    crc = ( crcType == CRC_TYPE_IBM ) ? CRC_IBM_SEED : CRC_CCITT_SEED;

    for( i = 0; i < bufferLength; i++ )
    {
        crc = ComputeCrc( crc, buffer[i], polynomial );
    }

    if( crcType == CRC_TYPE_IBM )
    {
        return crc;
    }
    else
    {
        return ( U16 )( ~crc );
    }
}
```

Figure 54. Example CRC Code

©2013 Semtech Corporation

7.6. Example Temperature Reading

The following routine(s) may be implemented to read the temperature and calibrate the sensor:

Temperature.c

```
/*!
 * Reads the raw temperature
 * \retval temperature New raw temperature reading in 2's complement format
 */
S8 RadioGetRawTemp( void )
{
    S8 temp = 0;
    U8 regValue = 0;

    regValue = RadioRead( 0x3C );

    // 2's complements conversion
    temp = regValue & 0x7F;
    if( ( regValue & 0x80 ) == 0x80 )
    {
        temp *= -1;
    }
    return temp;
}

/*!
 * Computes the temperature compensation factor
 * \param [IN] actualTemp Actual temperature measured by an external device
 * \retval compensationFactor Computed compensation factor
 */
S8 RadioCalibrateTemp( S8 actualTemp )
{
    return actualTemp - RadioGetRawTemp( );
}

/*!
 * Gets the actual compensated temperature
 * \param [IN] compensationFactor Return value of the calibration function
 * \retval New compensated temperature value
 */
S8 RadioGetTemp( S8 compensationFactor )
{
    return RadioGetRawTemp( ) + compensationFactor;
}

/*!
 * Usage example
 */
void main( void )
{
    S8 temp;
    S8 actualTemp = 0;
    S8 compensationFactor = 0;

    // Ask user for the temperature during calibration
    actualTemp = AskUserTemperature( );
    compensationFactor = RadioCalibrateTemp( actualTemp );

    while( True )
    {
        temp = RadioGetTemp( compensationFactor );
    }
}
```

Figure 55. Example Temperature Reading

©2013 Semtech Corporation

8. Packaging Information

8.1. Package Outline Drawing

The SX1276/77/78 is available in a 28-lead QFN package as shown in Figure 56.

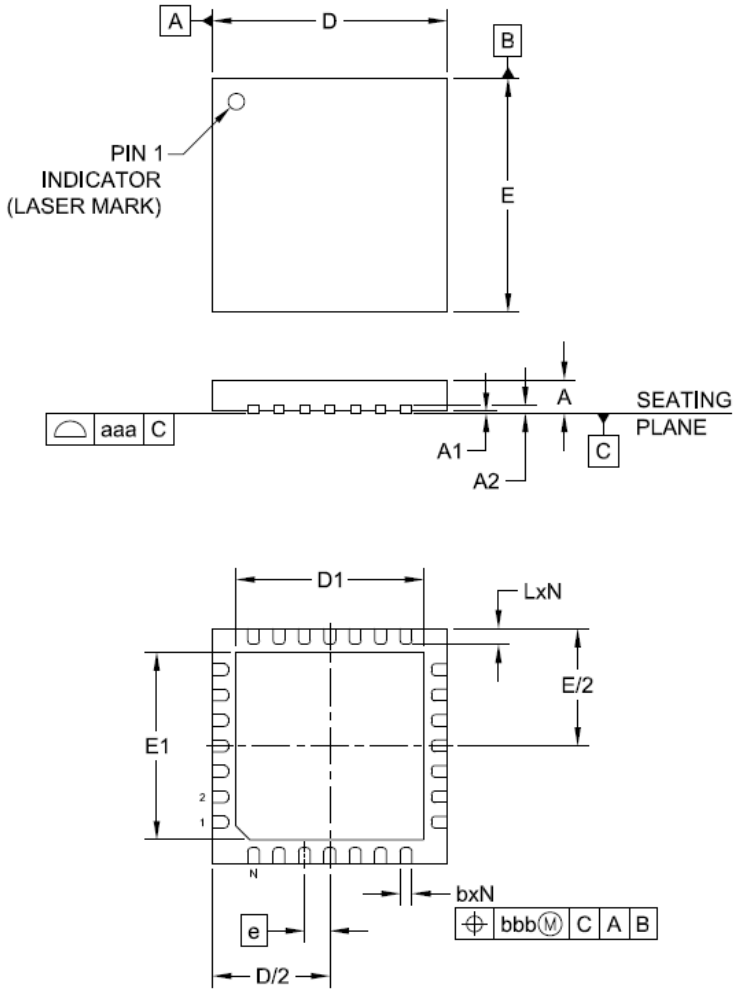

DIMENSIONS			
DIM	MILLIMETERS		
	MIN	NOM	MAX
A	0.80	—	1.00
A1	0.00	—	0.05
A2		(0.20)	
b	0.25	0.30	0.35
D	5.90	6.00	6.10
D1	4.65	4.80	4.90
E	5.90	6.00	6.10
E1	4.65	4.80	4.90
e		0.65 BSC	
L	0.30	0.40	0.50
N		28	
aaa		0.08	
bbb		0.10	

NOTES:
1. CONTROLLING DIMENSIONS ARE IN MILLIMETERS (ANGLES IN DEGREES).
2. COPLANARITY APPLIES TO THE EXPOSED PAD AS WELL AS THE TERMINALS.

Figure 56. Package Outline Drawing

©2013 Semtech Corporation

8.2. Recommended Land Pattern

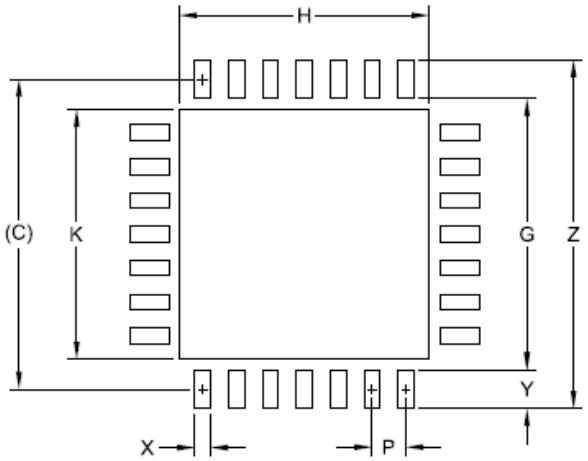

DIMENSIONS	
DIM	MILLIMETERS
C	(5,95)
G	5.20
H	4.80
K	4.80
P	0.65
X	0.30
Y	0.75
Z	6.70

NOTES:

1. CONTROLLING DIMENSIONS ARE IN MILLIMETERS (ANGLES IN DEGREES).
2. THIS LAND PATTERN IS FOR REFERENCE PURPOSE ONLY.
   CONSULT YOUR MANUFACTURING GROUP TO ENSURE YOUR COMPANY'S MANUFACTURING GUIDELINES ARE MET.
3. THERMAL VIAS IN THE LAND PATTERN OF THE EXPOSED PAD SHALL BE CONNECTED TO A SYSTEM GROUND PLANE. FAILURE TO DO SO MAY COMPROMISE THE THERMAL AND/OR FUNCTIONAL PERFORMANCE OF THE DEVICE.
4. SQUARE PACKAGE - DIMENSIONS APPLY IN BOTH " X " AND " Y " DIRECTIONS.

Figure 57. Recommended Land Pattern

©2013 Semtech Corporation

9. Revision History

Table 95 Revision History

Revision	Date	Comment
0.0	May 2013	First Preliminary release

©2013 Semtech Corporation

© Semtech 2013
All rights reserved. Reproduction in whole or in part is prohibited without the prior written consent of the copyright owner. The information presented in this document does not form part of any quotation or contract, is believed to be accurate and reliable and may be changed without notice. No liability will be accepted by the publisher for any consequence of its use. Publication thereof does not convey nor imply any license under patent or other industrial or intellectual property rights. Semtech assumes no responsibility or liability whatsoever for any failure or unexpected operation resulting from misuse, neglect improper installation, repair or improper handling or unusual physical or electrical stress including, but not limited to, exposure to parameters beyond the specified maximum ratings or operation outside the specified range.

SEMTECH PRODUCTS ARE NOT DESIGNED, INTENDED, AUTHORIZED OR WARRANTED TO BE SUITABLE FOR USE IN LIFE-SUPPORT APPLICATIONS, DEVICES OR SYSTEMS OR OTHER CRITICAL APPLICATIONS. INCLUSION OF SEMTECH PRODUCTS IN SUCH APPLICATIONS IS UNDERSTOOD TO BE UNDERTAKEN SOLELY AT THE CUSTOMER'S OWN RISK. Should a customer purchase or use Semtech products for any such unauthorized application, the customer shall indemnify and hold Semtech and its officers, employees, subsidiaries, affiliates, and distributors harmless against all claims, costs damages and attorney fees which could arise.

Contact information

Semtech Corporation
Wireless & Sensing Products Division
200 Flynn Road, Camarillo, CA 93012
Phone: (805) 498-2111 Fax: (805) 498-3804
E-mail: sales@semtech.com
support_rf@semtech.com
Internet: http://www.semtech.com