元器件交易网www.cecb2b.com

PD-95830 RevB

International
IOR Rectifier

IRAMS10UP60B

iMOTION™ Series

Plug N Drive™ Integrated Power Module for Appliance Motor Drive

10A, 600V
with Internal Shunt Resistor

Description

International Rectifier's IRAMS10UP60B is an Integrated Power Module developed and optimized for electronic motor control in appliance applications such as washing machines and refrigerators. Plug N Drive technology offers an extremely compact, high performance AC motor-driver in a single isolated package for a very simple design. An internal shunt is also included and offers easy current feedback and overcurrent monitor for precise and safe operation. A built-in temperature monitor and over-current protection, along with the short-circuit rated IGBTs and integrated under-voltage lockout function, deliver high level of protection and fail-safe operation. The integration of the bootstrap diodes for the high-side driver section, and the single polarity power supply required to drive the internal circuitry, simplify the utilization of the module and deliver further cost reduction advantages.

Features

- Internal Shunt Resistor
- Integrated Gate Drivers and Bootstrap Diodes
- Temperature Monitor
- Fully Isolated Package
- Low $V_{CE(on)}$ Non Punch Through IGBT Technology
- Undervoltage lockout for all channels
- Matched propagation delay for all channels
- Schmitt-triggered input logic
- Cross-conduction prevention logic
- Lower di/dt gate driver for better noise immunity
- Motor Power range 0.4~0.75kW / 85~253 Vac
- Isolation 2000V_{RMS} /1min

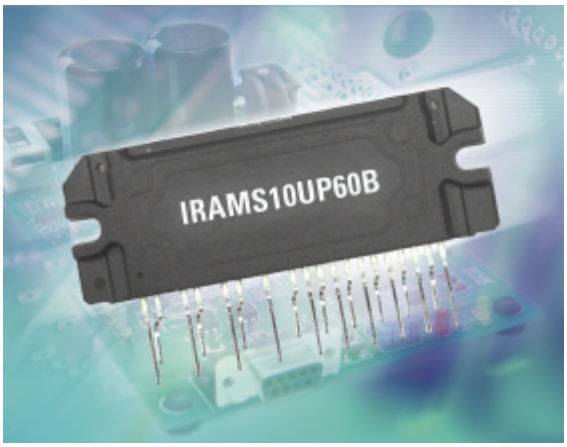

Absolute Maximum Ratings

Parameter	Description	Max. Value	Units
V_{CES}	Maximum IGBT Blocking Voltage	600	V
V^+	Positive Bus Input Voltage	450	
I_o @ T_C=25°C	RMS Phase Current (see Note 1)	10	A
I_o @ T_C=100°C	RMS Phase Current (see Note 1)	5	
I_{pk}	Maximum Peak Phase Current (tp<100ms)	15	
F_p	Maximum PWM Carrier Frequency	20	kHz
P_d	Maximum Power dissipation per Phase	20	W
V_{iso}	Isolation Voltage (1min)	2000	V_{RMS}
$T_{J\ (IGBT\ \&\ Diodes)}$	Operating Junction temperature Range	-40 to +150	°C
$T_{J\ (Driver\ IC)}$	Operating Junction temperature Range	-40 to +150	
T	Mounting torque Range (M3 screw)	0.8 to 1.0	Nm

Note 1: Limited by current protection, see table "Inverter Section Electrical Characteristics" on page 3

元器件交易网www.cecb2b.com

Internal Electrical Schematic - IRAMS10UP60B

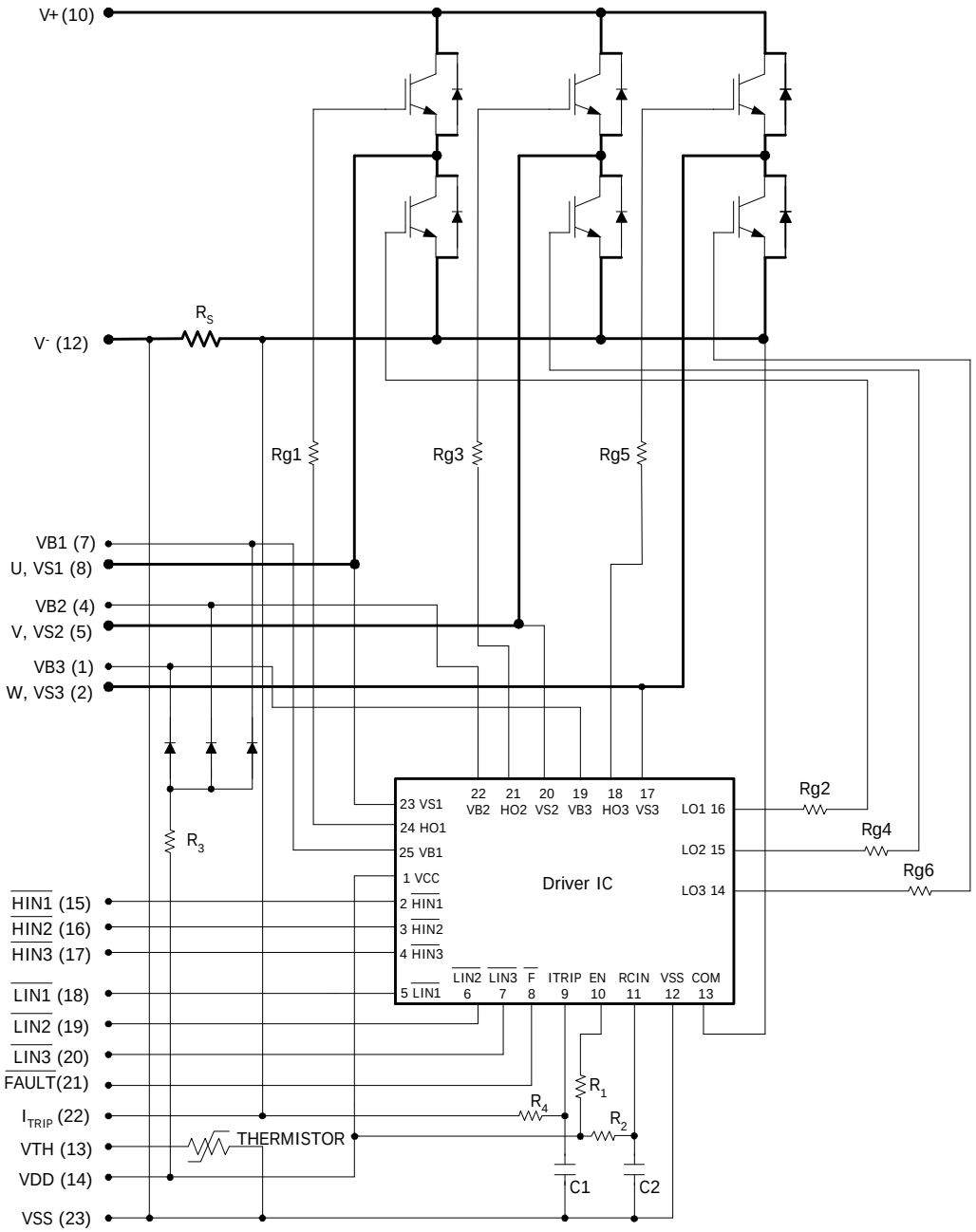

元器件交易网www.cecb2b.com

Inverter Section Electrical Characteristics @ T_J=25°C

Symbol	Parameter	Min	Typ	Max	Units	Conditions
$V_{(BR)CES}$	Collector-to-Emitter Breakdown Voltage	600	---	---	V	V_{IN}=5V, I_C=250µA
$\Delta V_{(BR)CES}$ / ΔT	Temperature Coeff. Of Breakdown Voltage	---	0.57	---	V/°C	V_{IN}=5V, I_C=1.0mA (25°C - 150°C)
$V_{CE(ON)}$	Collector-to-Emitter Saturation Voltage	---	1.7	2.0	V	I_C=5A T_J=25°C, V_{DD}=15V
		---	2.0	2.4		I_C=5A T_J=150°C
I_{CES}	Zero Gate Voltage Collector Current-to-Emitter	---	5	15	µA	V_{IN}=5V, V^+=600V
		---	10	40		V_{IN}=5V, V^+=600V, T_J=150°C
I_{lk_module}	Zero Gate Voltage Phase-to-phase Current	--	--	50	µA	V_{IN}=5V, V^+=600V
V_{FM}	Diode Forward Voltage Drop	---	1.8	2.35	V	I_C=5A
		---	1.3	1.7		I_C=5A, T_J=150°C
I_{BUS_Trip}	Current Protection Threashold (positive going)	13.1		16.4	A	T_j=-40°C to 150°C

Inverter Section Switching Characteristics @ T_J=25°C

Symbol	Parameter	Min	Typ	Max	Units	Conditions
E_{on}	Turn-On Switching Loss	---	200	235	µJ	I_C=5A, V+=400V
E_{off}	Turn-Off Switching Loss	---	75	100		V_{DD}=15V, L=1mH
E_{tot}	Total Switching Loss	---	275	335		See CT1 T_J=25°C
E_{on}	Turn-on Swtiching Loss	---	300	360	µJ	T_J=150°C
E_{off}	Turn-off Switching Loss	---	135	165		Energy losses include "tail" and
E_{tot}	Total Switching Loss	---	435	525		diode reverse recovery
E_{rec}	Diode Rev. Recovery energy	---	30	40	µJ	T_J=150°C, V^+ =400V V_{DD}=15V,
t_{rr}	Diode Reverse Recovery time	---	100	145	ns	I_F=5A, L=1mH
RBSOA	Reverse Bias Safe Operating Area	FULL SQUARE				T_J=150°C, I_C=5A, V_P=600V V^+=480V, V_{DD}=+15V to 0V See CT3
SCSOA	Short Circuit Safe Operating Area	10	---	---	µs	T_J=150°C, V_P=600V, V^+=360V, V_{DD}=+15V to 0V See CT2

Thermal Resistance

Symbol	Parameter	Min	Typ	Max	Units	Conditions
$R_{th(J-C)}$	Junction to case thermal resistance, each IGBT under inverter operation.	---	4.2	4.7	°C/W	Flat, greased surface. Heatsink compound thermal conductivity - 1W/mK
$R_{th(J-C)}$	Junction to case thermal resistance, each Diode under inverter operation.	---	5.5	6.5	°C/W	
$R_{th(C-S)}$	Case to Sink thermal resistance	---	0.1	---	°C/W	

元器件交易网www.cecb2b.com

Absolute Maximum Ratings Driver Function

Absolute Maximum Ratings indicate sustained limits beyond which damage to the device may occur. All voltage parameters are absolute voltages referenced to V_{SS} . (Note 2)

Symbol	Definition	Min	Max	Units
$V_{S1,2,3}$	High Side offset voltage	-0.3	600	V
$V_{B1,2,3}$	High Side floating supply voltage	-0.3	20	V
V_{DD}	Low Side and logic fixed supply voltage	-0.3	20	V
V_{IN}	Input voltage LIN, HIN, T/I_{TRIP}	-0.3	V_{SS}+15 or V_{CC}+0.3	V
T_J	Juction Temperature	-40	150	°C

Raccomended Operating Conditions Driver Function

The Input/Output logic timing diagram is shown in Figure 1. For proper operation the device should be used within the recommended conditions. All voltages are absolute referenced to V_{SS}. The V_S offset is tested with all supplies biased at 15V differential (Note 2). All input pin (V_{IN}) and I_{TRIP} are clamped with a 5.2V zener diode and pull-up resistor to V_{DD}

Symbol	Definition	Min	Max	Units
$V_{B1,2,3}$	High side floating supply voltage	V_S+12	V_S+20	V
$V_{S1,2,3}$	High side floating supply offset voltage	Note 3	600	
V_{DD}	Low side and logic fixed supply voltage	12	20	V
V_{IN}	Logic input voltage LIN, HIN	V_{SS}	V_{SS}+5	V

Static Electrical Characteristics Driver Function

V_{BIAS} (V_{DD}, $V_{BS1,2,3}$)=15V, unless otherwise specified. The V_{IN} and I_{IN} parameters are referenced to V_{SS} and are applicable to all six channels. (Note 2)

Symbol	Definition	Min	Typ	Max	Units
$V_{IN,th+}$	Positive going input threshold	3.0	---	---	V
$V_{IN,th-}$	Negative going input threshold	---	---	0.8	V
V_{CCUV+} V_{BSUV+}	V_{CC} and V_{BS} supply undervoltage Positive going threshold	10.6	11.1	11.6	V
V_{CCUV-} V_{BSUV-}	V_{CC} and V_{BS} supply undervoltage Negative going threshold	10.4	10.9	11.4	V
V_{CCUVH} V_{BSUVH}	V_{CC} and V_{BS} supply undervoltage $I_{lockout}$ hysteresis	---	0.2	---	V
I_{QBS}	Quiescent V_{BS} supply current	---	70	120	µA
I_{QCC}	Quiscent V_{CC} supply current	---	1.6	2.3	mA
I_{LK}	Offset Supply Leakage Current	---	---	50	µA
I_{IN+}	Input bias current (OUT=LO)	---	100	220	µA
I_{IN+}	Input bias current (OUT=HI)	---	200	300	µA
V(I_{TRIP})	I_{TRIP} threshold Voltage (OUT=HI or OUT=LO)	0.44	0.49	0.54	V

元器件交易网www.cecb2b.com

Dynamic Electrical Characteristics

$V_{DD}=V_{BS}=V_{BIAS}=15V$, $PWM_{IN}=2kHz$, $V_{IN_ON}=V_{IN_th+}$, $V_{IN_OFF}=V_{IN_th-}$

$T_A=25°C$, unless otherwise specified

Symbol	Definition	Min	Typ	Max	Units
T_{ON}	Input to output propagation turn-on delay time (see fig.11)	-	470	-	ns
T_{OFF}	Input to output propagation turn-off delay time (see fig. 11)	-	615	-	ns
D_T	Dead Time	-	290	-	ns
I/T_{Trip}	T/I_{Trip} to six switch to turn-off propagation delay (see fig. 2)	-	750	-	ns
T_{FCLTRL}	Post I_{Trip} to six switch to turn-off clear time (see fig. 2)	-	9	-	ms

Internal NTC - Thermistor Characteristics

Parameter		Typ	Units	Conditions
R_{25}	Resistance	100 +/- 3%	kΩ	T_C = 25°C
R_{125}	Resistance	2.522 ± 10.9%	kΩ	T_C = 125°C
B	B-constant (25-50°C)	4250 +/- 2%	k	$R_2 = R_1 e^{[B(1/T2 - 1/T1)]}$
Temperature Range		-40 / 125	°C	
Typ. Dissipation constant		1	mW/°C	T_C = 25°C

Internal Current Sensing Resistor - Shunt Characteristics

Parameter		Units
Resistance	33.3 ±1%	mΩ
Tollerance	±1%	
Max Power Dissipation	2.2	W
Temperature Range	-40 / 125	°C

Note 2: For more details, see IR21363 data sheet

Note 3: Logic operational for V_S from V^- -5V to V^- +600V. Logic state held for V_S from V^- -5V to V^- -V_{BS}. (please refer to DT97-3 for more details)

Thermistor Built-in IRAMS10UP60B

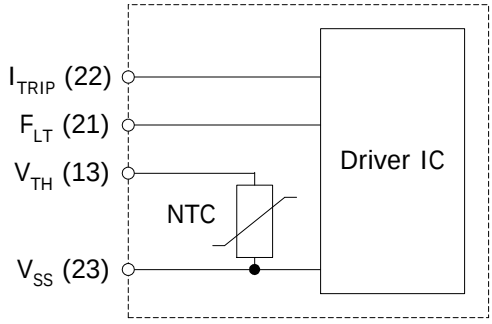

元器件交易网www.cecb2b.com

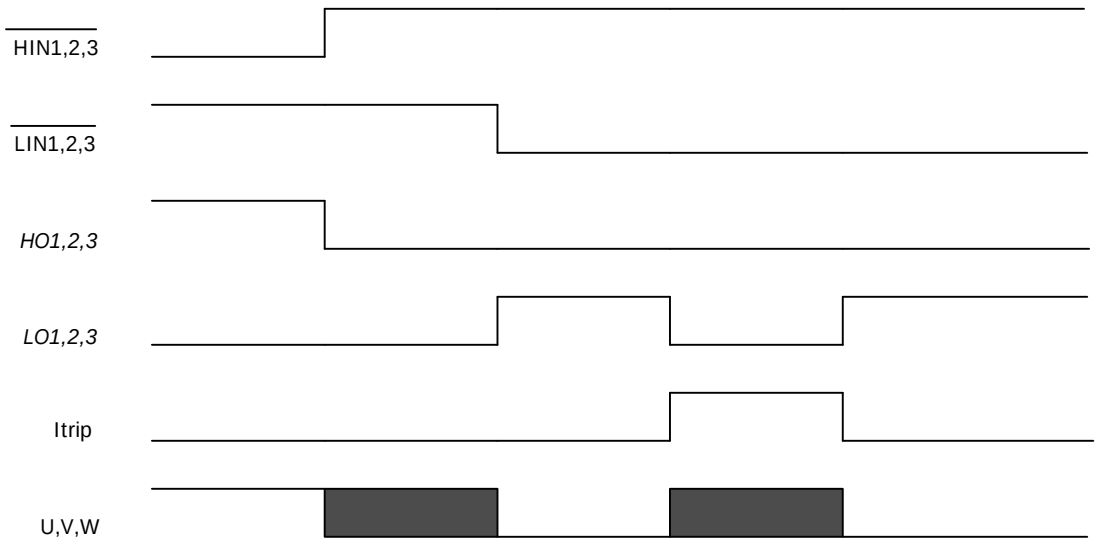

Figure1. Input/Output Timing Diagram

Note 4: The shaded area indicates that both high-side and low-side switches are off and therefore the half-bridge output voltage would be determined by the direction of current flow in the load.

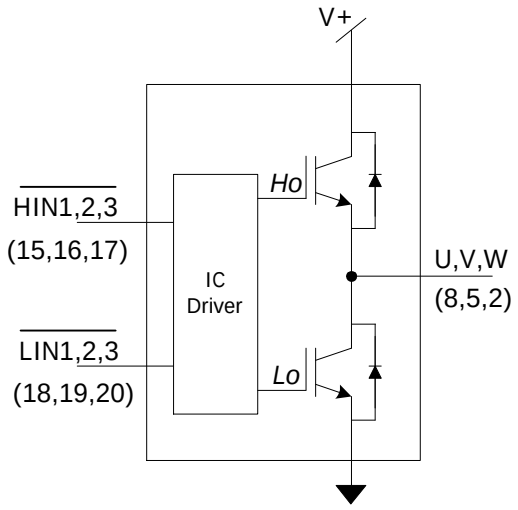

Itrip	$\overline{\text{HIN1,2,3}}$	$\overline{\text{LIN1,2,3}}$	U,V,W
0	0	1	V+
0	1	0	0
0	1	1	X
1	X	X	X

元器件交易网www.cecb2b.com

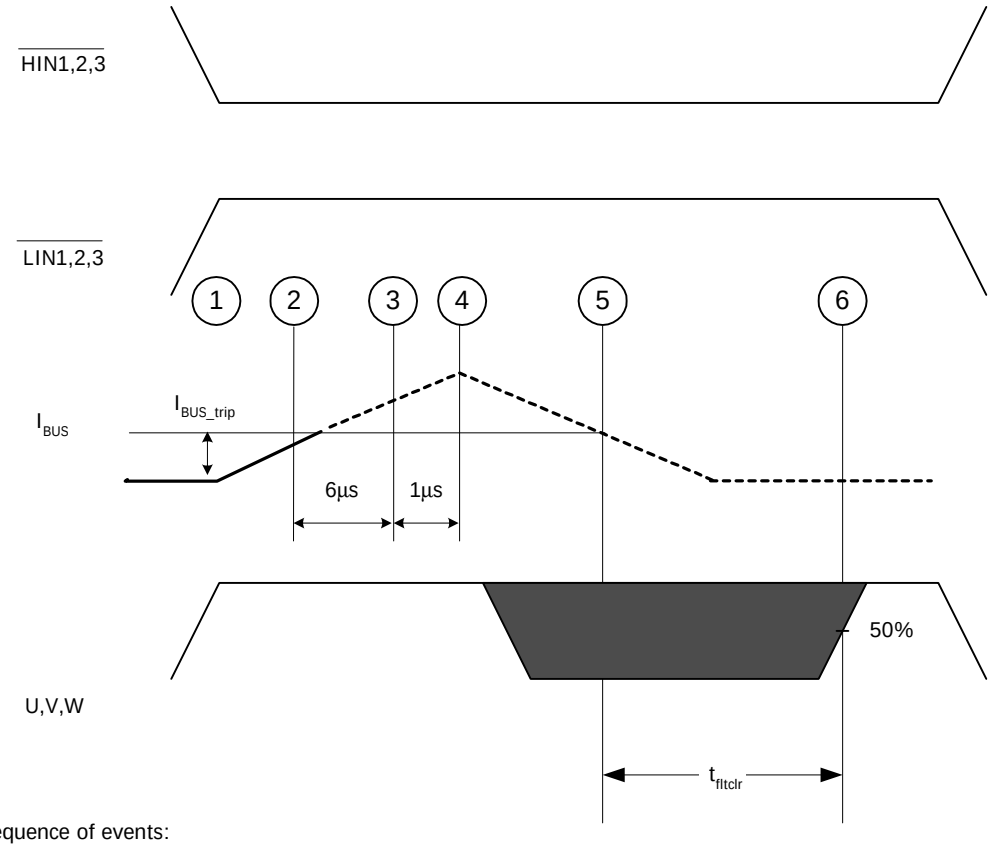

Sequence of events:
1-2) Current begins to rise
2) Current reaches I_{BUS_Trip} level
2-3) Current is higher than I_{BUS_Trip} for at least 6µs. This value is the worst-case condition with very low over-current. In case of high current (short circuit), the actual delay will be smaller.
3-4) Delay between driver identification of over-current condition and disabling of all outputs
4) Current starts decreasing, eventually reaching 0
5) Current goes below I_{BUS_trip}, the driver starts its auto-reset sequence
6) Driver is automatically reset and normal operation can resume (over-current condition must be removed by the time the drivers automatically resets itself)

Figure 2. I_{Trip} Timing Waveform

Note 5: The shaded area indicates that both high-side and low-side switches are off and therefore the half-bridge output voltage would be determined by the direction of current flow in the load.

元器件交易网www.cecb2b.com

Module Pin-Out Description

Pin	Name	Description
1	VB3	High Side Floating Supply Voltage 3
2	W,VS3	Output 3 - High Side Floating Supply Offset Voltage
3	na	none
4	VB2	High Side Floating Supply voltage 2
5	V,VS2	Output 2 - High Side Floating Supply Offset Voltage
6	na	none
7	VB1	High Side Floating Supply voltage 1
8	U,VS1	Output 1 - High Side Floating Supply Offset Voltage
9	na	none
10	V+	Positive Bus Input Voltage
11	na	none
12	V-	Negative Bus Input Voltage
13	VTH	Temperature Feedback
14	VDD	+15V Main Supply
15	HIN1	Logic Input High Side Gate Driver - Phase 1
16	HIN2	Logic Input High Side Gate Driver - Phase 2
17	HIN3	Logic Input High Side Gate Driver - Phase 3
18	LIN1	Logic Input Low Side Gate Driver - Phase 1
19	LIN2	Logic Input Low Side Gate Driver - Phase 2
20	LIN3	Logic Input Low Side Gate Driver - Phase 3
21	FAULT	Fault indicator
22	Itrip	Current Sense and Itrip Pin
23	VSS	Negative Main Supply

元器件交易网www.cecb2b.com

Typical Application Connection IRAMS10UP60B

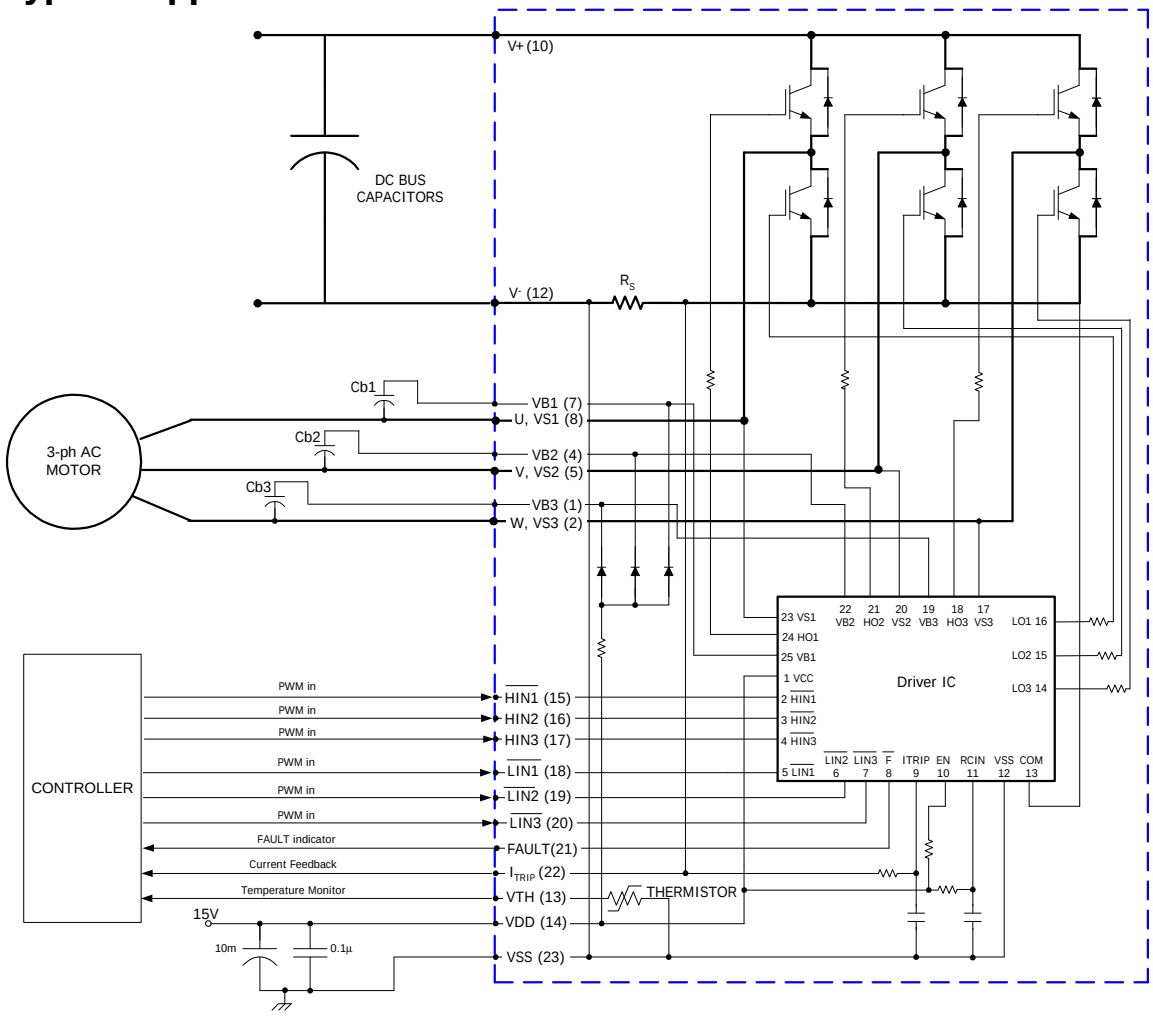

1. Electrolytic bus capacitors should be mounted as close to the module bus terminals as possible to reduce ringing and EMI problems. Additional high frequency ceramic capacitor mounted close to the module pins will further improve performance.

2. In order to provide good decoupling between V_{CC}-Gnd and V_B-V_{SS} terminals, the capacitors shown connected between these terminals should be located very close to the module pins. Additional high frequency capacitors, typically 0.1mF, are strongly recommended.

3. Value of the boot-strap capacitors depends upon the switching frequency. Their selection should be made based on IR design tip DN 98-2a, application note AN-1044 or Figure 9.

4. Current sense signal can be obtained from pin 22 and pin 23

5. After approx. 8 ms the FAULT is reset

6.PWM generator must be disabled within Fault duration to garantee shutdown of the system, overcurrent condition must be cleared before resuming operation

元器件交易网www.cecb2b.com

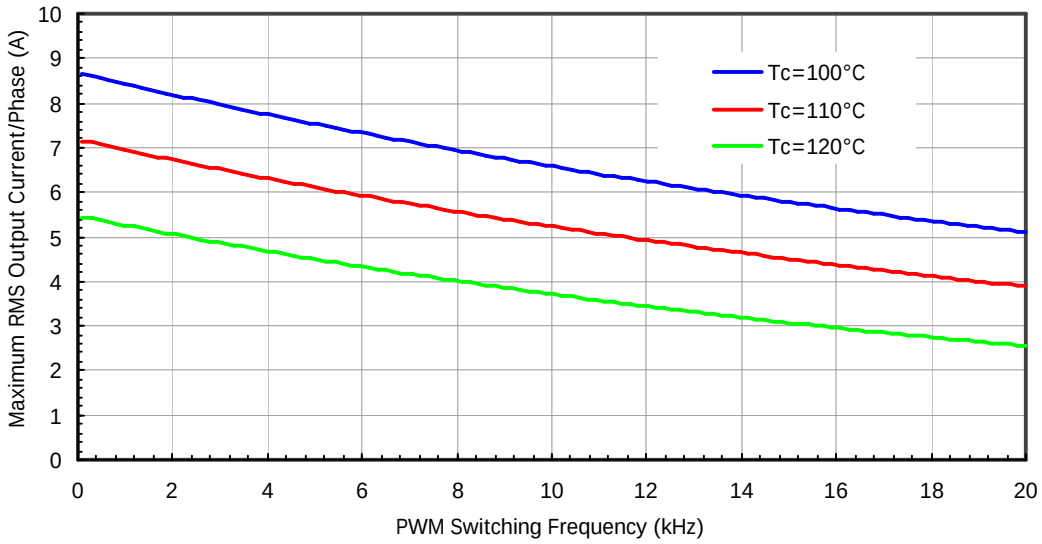

Figure 3. Maximum sinusoidal phase current as function of switching frequency V^+=400V , T_j=150°C, Modulation Depth=0.8, PF=0.6

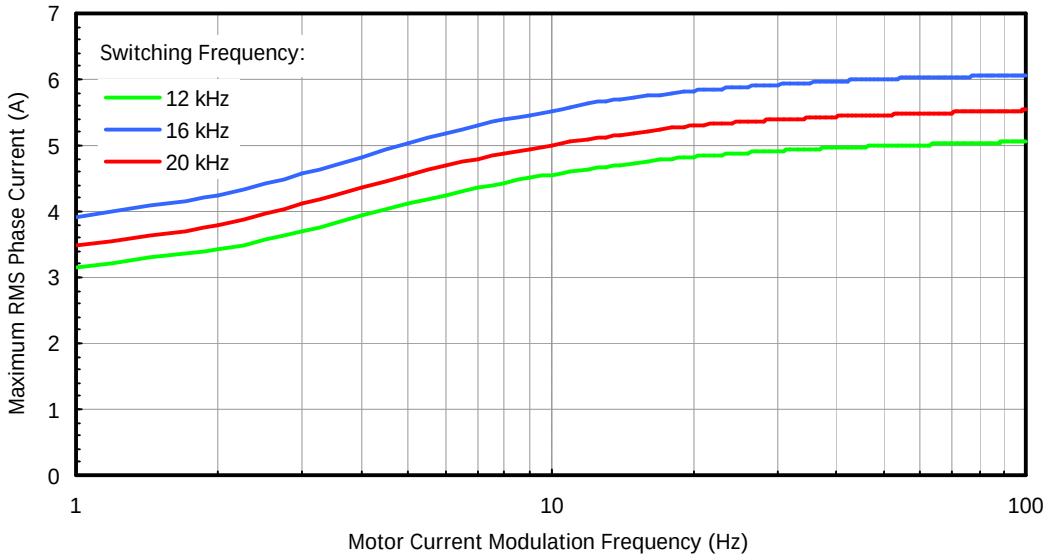

Figure 4. Maximum sinusoidal phase current as function of modulation frequency V^+=400V, T_j=150°C, T_c=100°C, Modulation Depth=0.8, PF=0.6

元器件交易网www.cecb2b.com

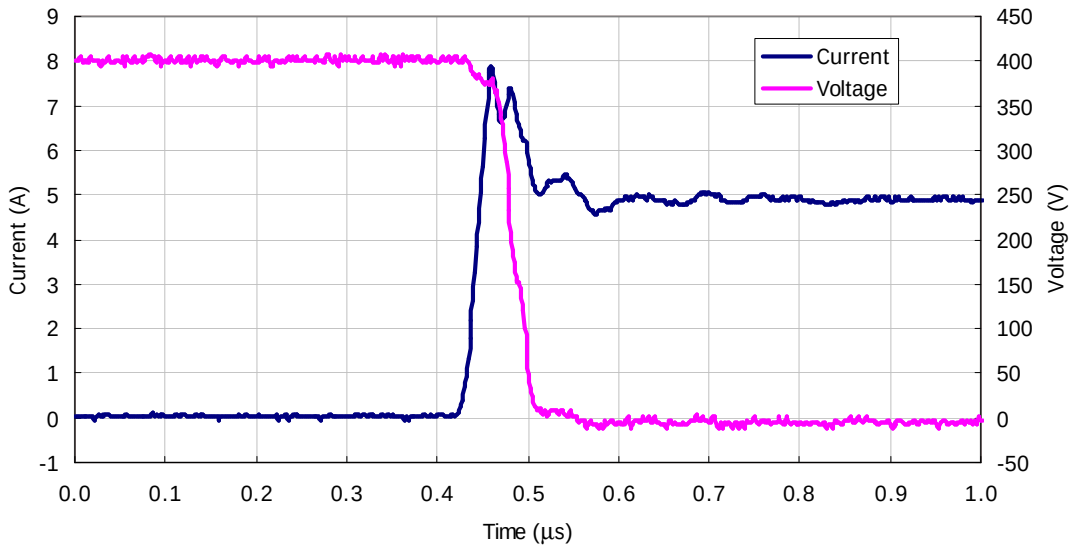

Figure 5. IGBT Turn-on. Typical turn-on waveform @T_J=150°C, V^+=400V

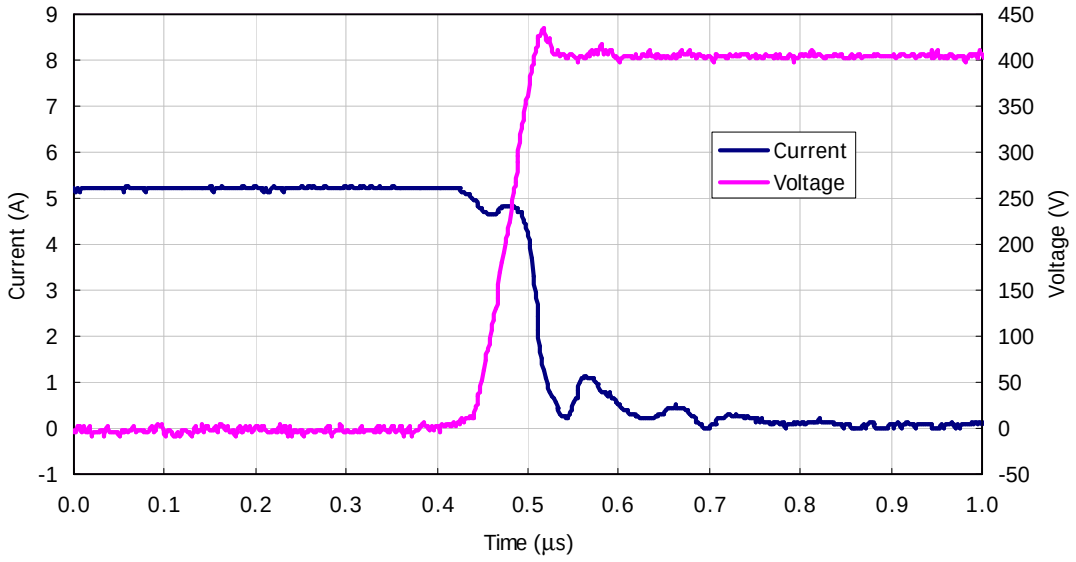

Figure 6. IGBT Turn-off. Typical turn-off waveform @T_J=150°C, V^+=400V

元器件交易网www.cecb2b.com

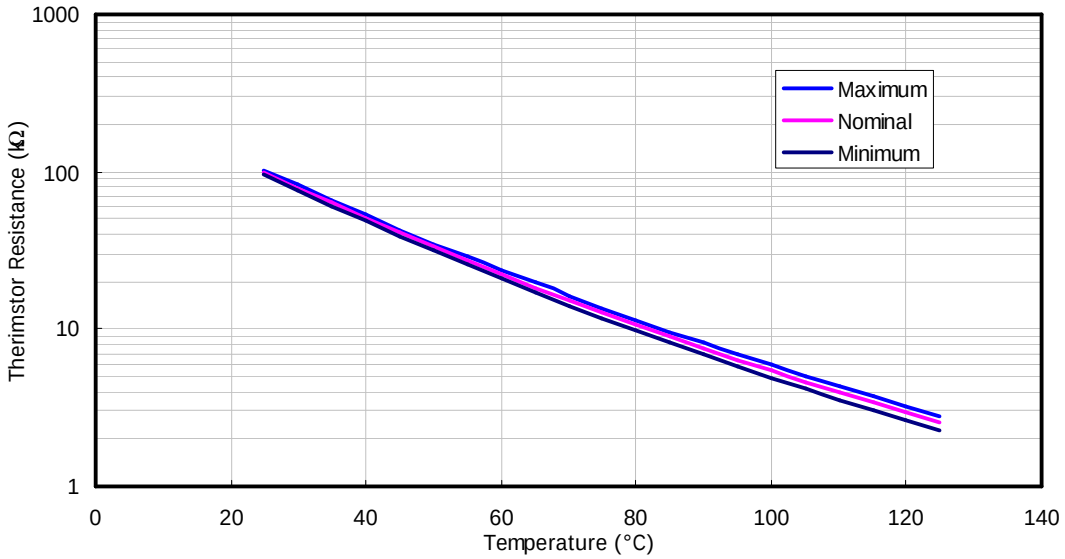

Figure 7. Variation of thermistor resistance with temperature

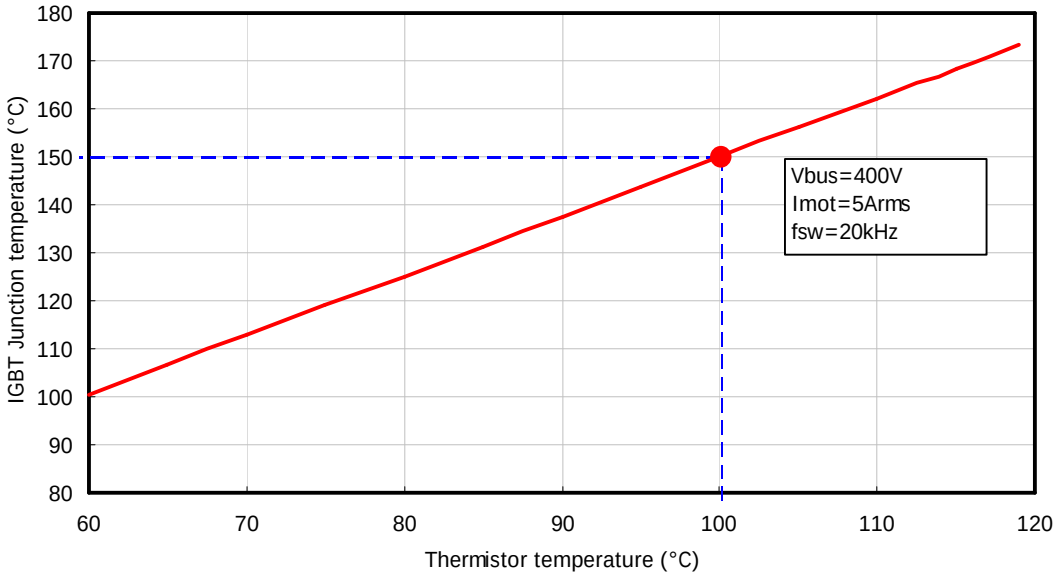

Figure 8. Estimated maximum IGBT junction temperature with thermistor temperature

元器件交易网www.cecb2b.com

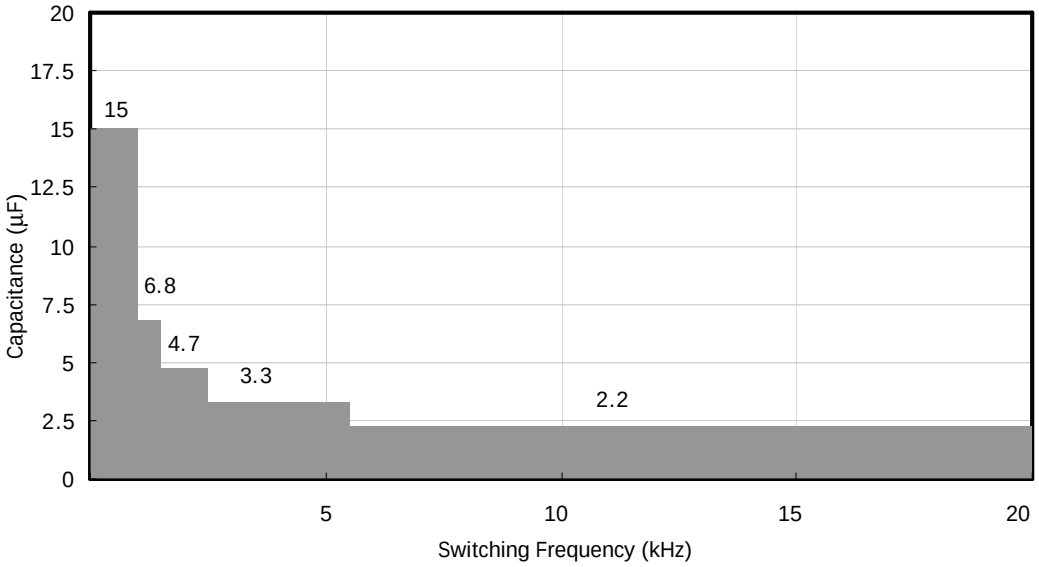

Figure 9. Recommended minimum Bootstrap Capacitor Value Vs Switching Frequency

元器件交易网www.cecb2b.com

Figure 11. Switching Parameter Definitions

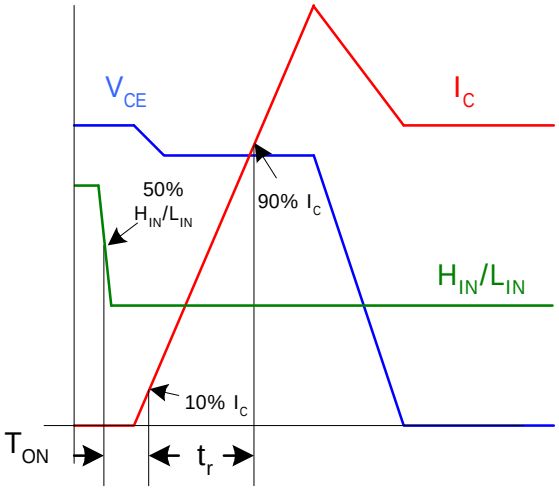

Figure 11a. Input to Output propagation turn-on delay time

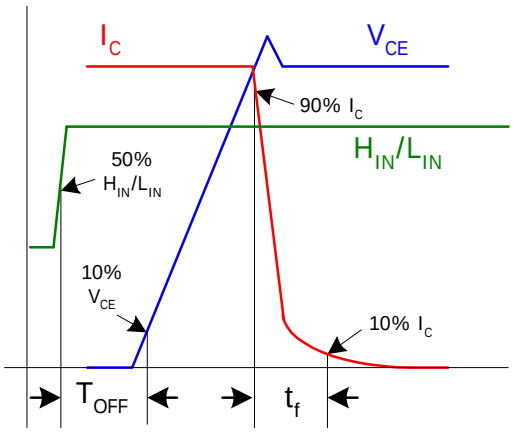

Figure 11b. Input to Output propagation turn-off delay time

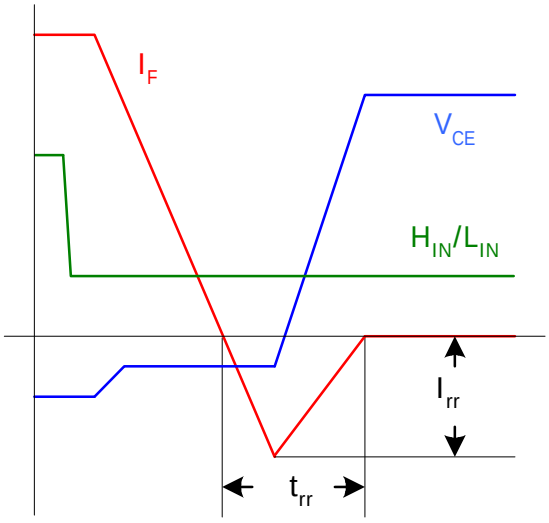

Figure 11c. Diode Reverse Recovery

元器件交易网www.cecb2b.com

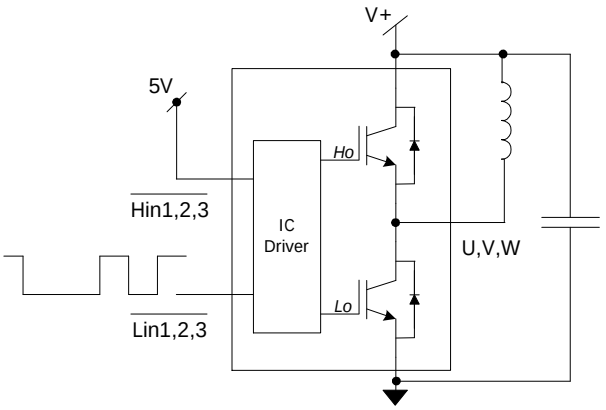

Figure CT1. Switching Loss Circuit

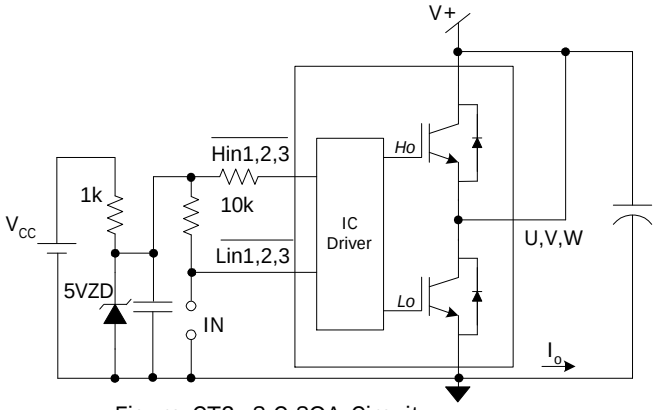

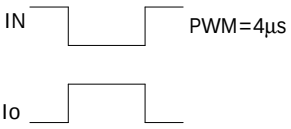

V_P=Peak Voltage on the IGBT die

Figure CT2. S.C.SOA Circuit

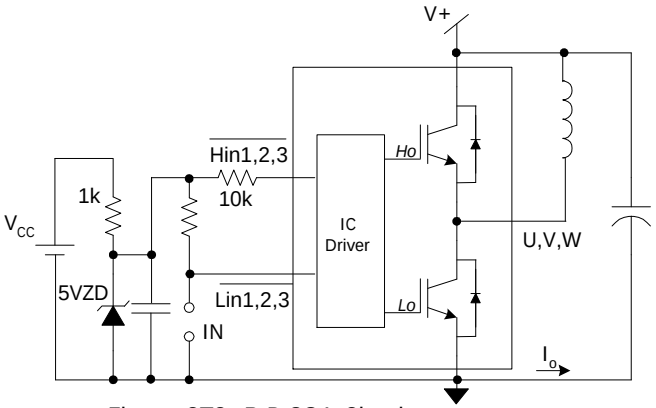

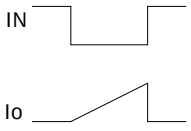

V_P=Peak Voltage on the IGBT die

Figure CT3. R.B.SOA Circuit

元器件交易网www.cecb2b.com

Package Outline

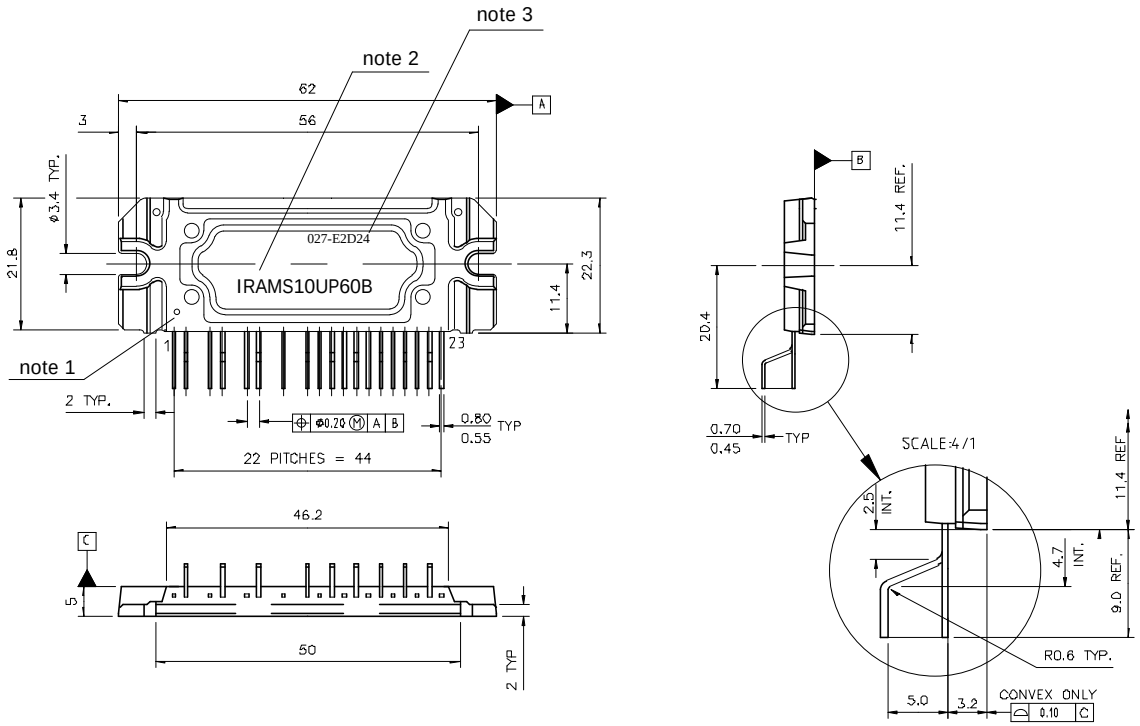

Standard pin leadforming option

Notes:
Dimensions in mm
1- Marking for pin 1 identification
2- Product Part Number
3- Lot and Date code marking

For mounting instruction, see AN1049

元器件交易网www.cecb2b.com

Package Outline

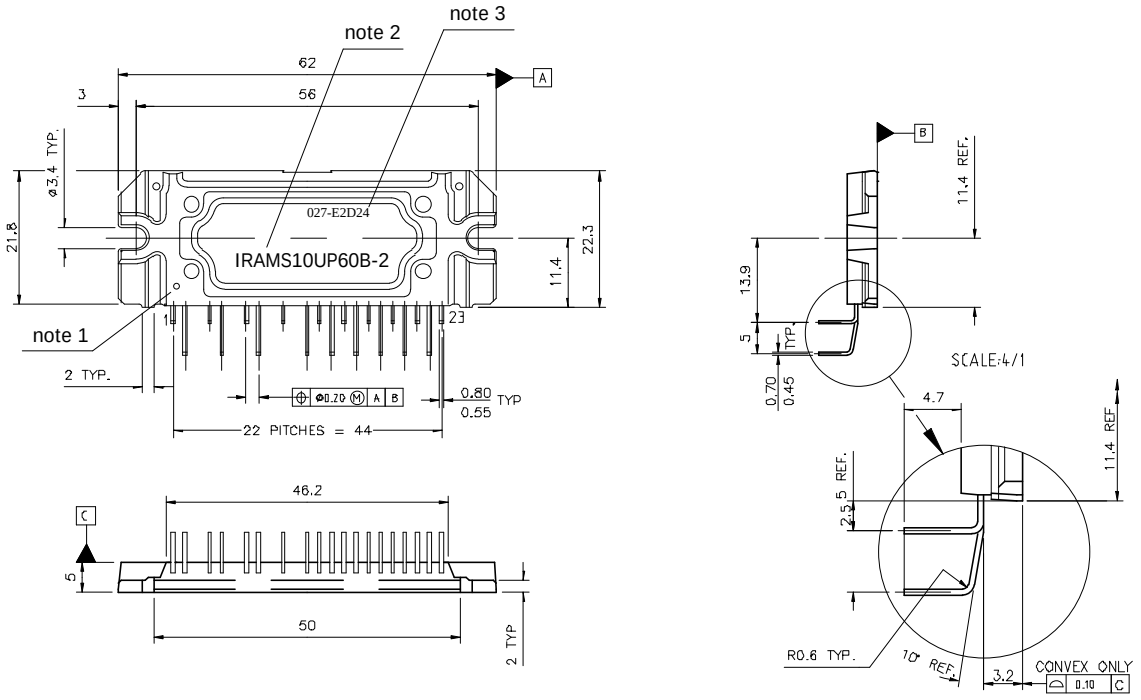

Pin leadforming option -2

Notes:
Dimensions in mm
1- Marking for pin 1 identification
2- Product Part Number
3- Lot and Date code marking

Data and Specifications are subject to change without notice

International IOR Rectifier

IR WORLD HEADQUARTERS: 233 Kansas St., El Segundo, California 90245, USA Tel: (310) 252-7105
TAC Fax: (310) 252-7903
Visit us at www.irf.com for sales contact information
9/04

元器件交易网www.cecb2b.com